ITA - AITES WORLD TUNNEL CONGRESS 2007 PRAGUE

The 3rd Training course
TUNNELLING IN URBAN AREA
Prague, 4-5th May 2007

Face stability in conventional tunnelling and EPB soil conditioning

TRAINING MATERIAL PREPARED BY

D. Peila and C.Oggeri

ASSOCIATION INTERNATIONALE DES TRAVAUX EN SOUTERRAIN
AITES

ITA
INTERNATIONAL TUNNELLING ASSOCIATION

The 3rd Training course
TUNNELLING IN URBAN AREA
Prague, 4-5th May 2007

Face stability in conventional tunnelling Part 1

Prepared by “C.Oggeri”

Prague - 2007

Index

Introduction

1

2

3

4

5

Why to control face stability:

- **Increase the free span and the stand up time to enlarge the size of the excavation section**
- **to cross “geo” or preexisting problems which can compromize the performances of non suitable TBM or enable the face support capabilities in conventional methods**
- **to control settlements and chymneying, and to protect buldings during tunnelling excavation in urban areas; to allow surface for road transportation**
- **to control water inflow**

Introduction

1

2

3

4

5

Which are the main actions that can be applied to increase stand up time or the unsupported span:

- to reduce of the excavation section into smaller portions
- to apply a counter pressure against the face
- to improve or reinforce the ground properties
- to use preventive supports of the rock mass installed ahead of the face

Face stability control

1) to reduce of the excavation section into smaller portions.

If the face is smaller, the control of the stability is easier, the characteristic time is shorter, smaller is the amount of waste rock to be removed and fewer supports have to be installed.

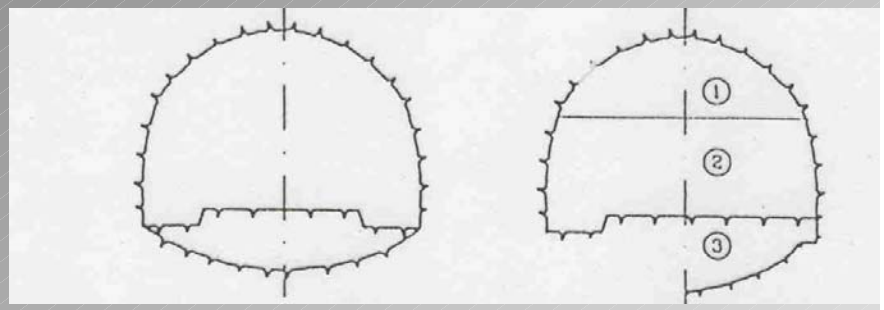

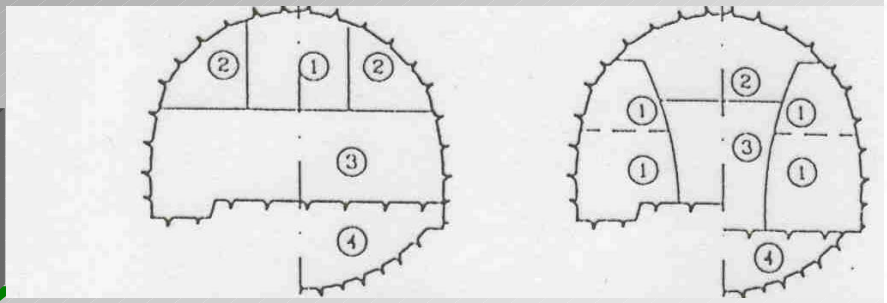

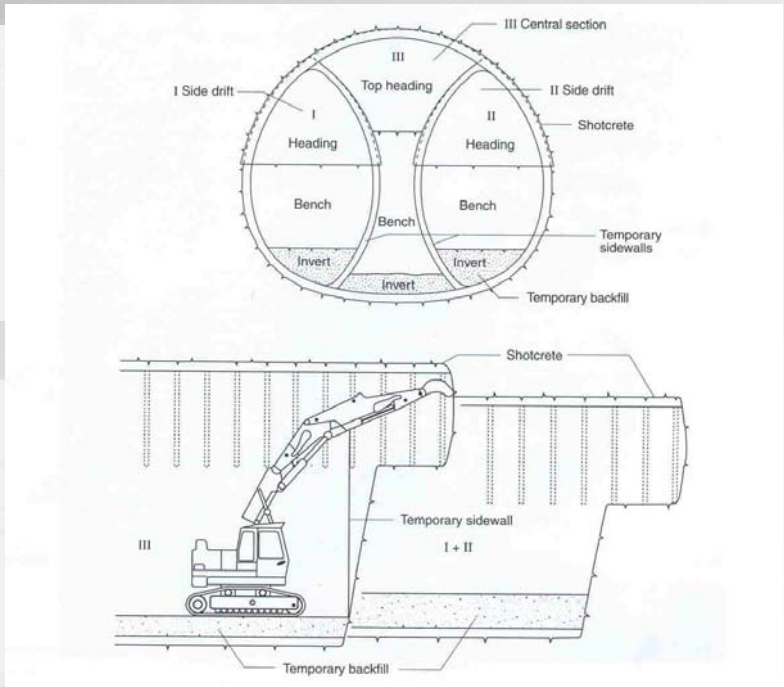

Face stability control

1

2

3

4

5

2) to apply a counter pressure at the face

- mechanized tunnelling

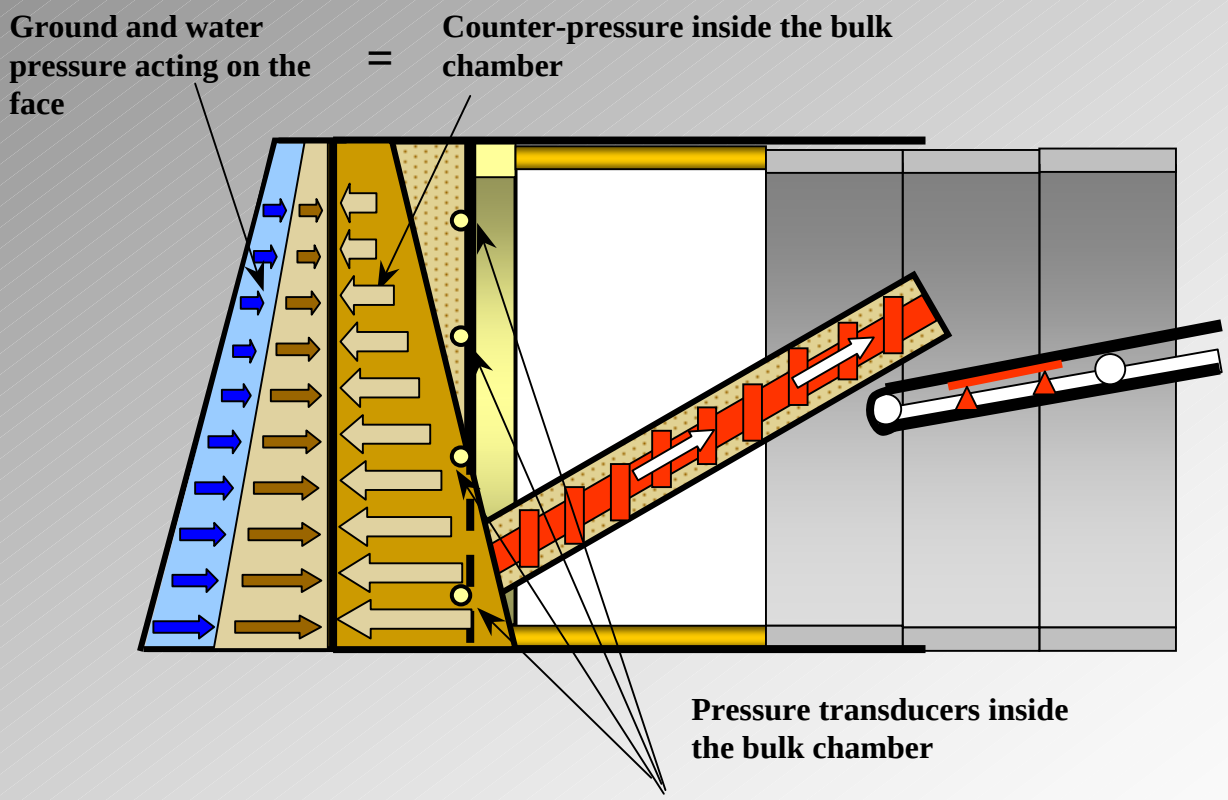

Face stability control

1

2

3

4

5

2) to apply a counter pressure at the face

- conventional tunnelling

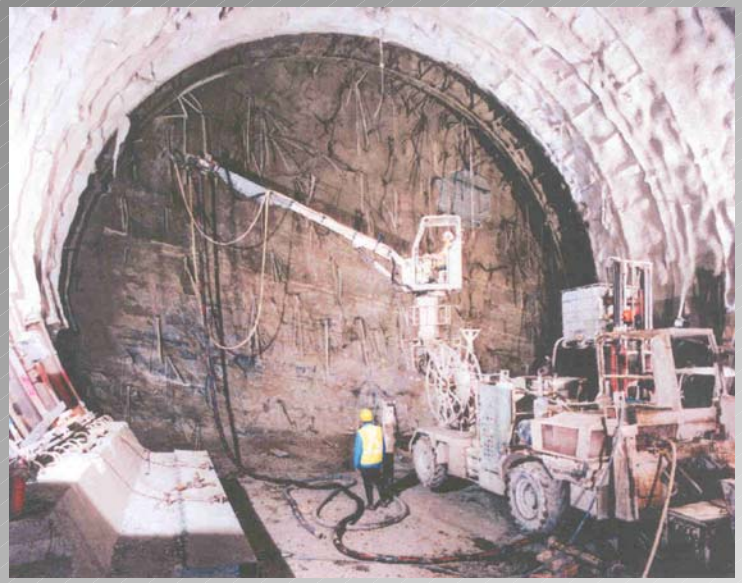

Face reinforcing at the Bologna Florence

high speed railway tunnels

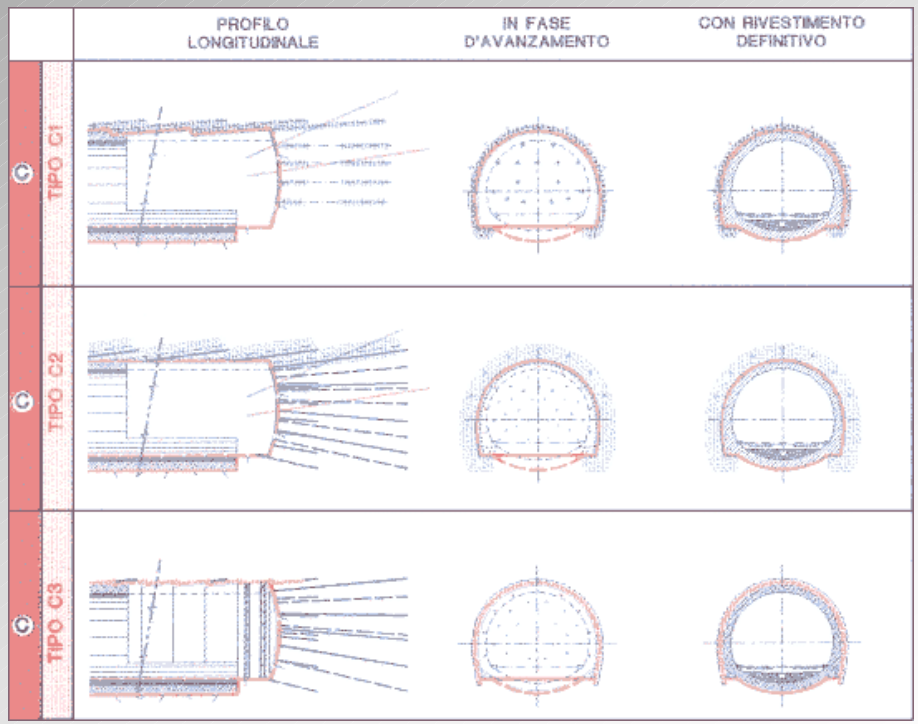

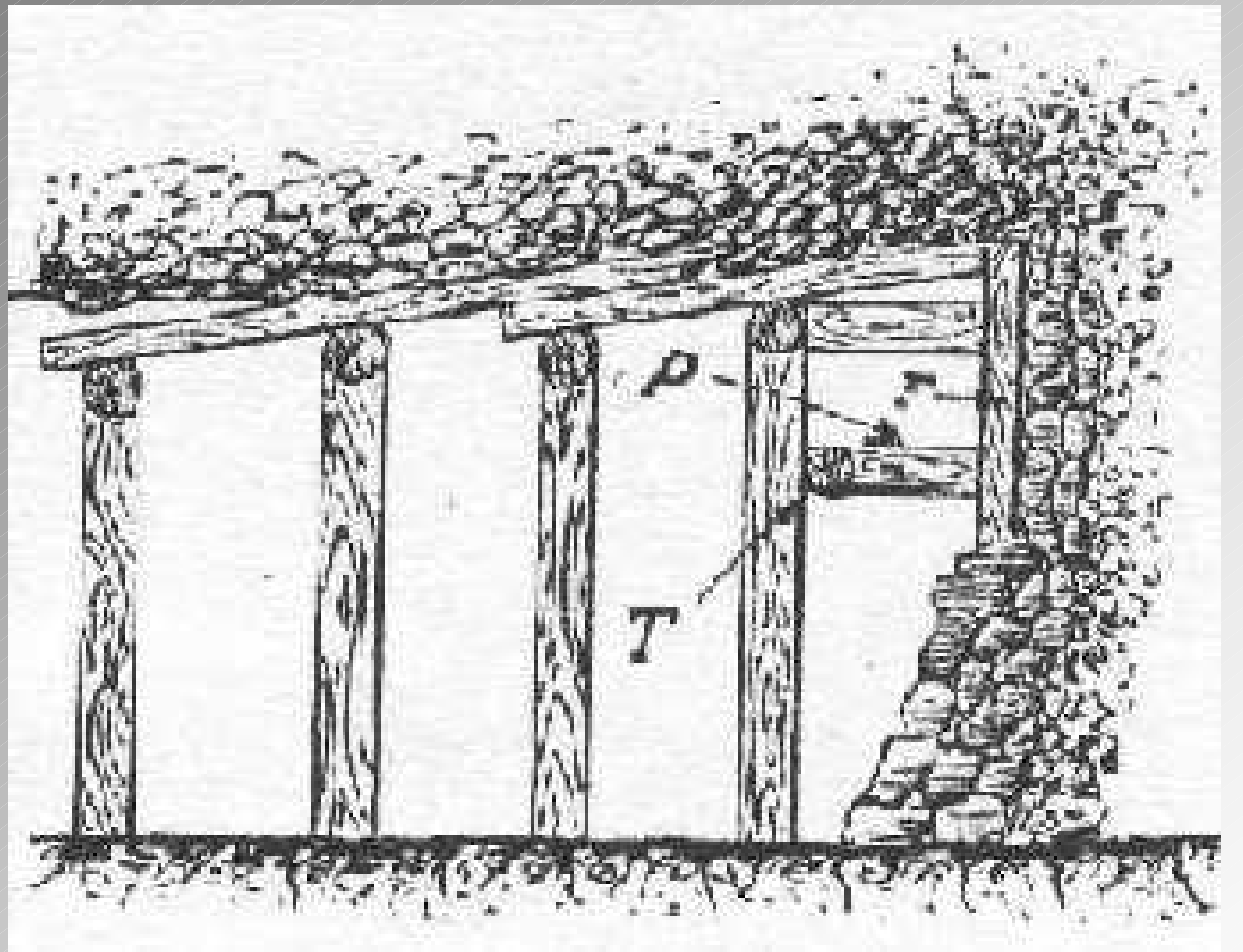

Face stability in conventional tunnelling and EPB soil conditioning

Face stability control

1

2

3-4) Improving the ground properties and pre-supporting the tunnel free span

3

The main problem when tunneling through difficult geotechnical conditions with conventional methods is the control of deformations of the tunnel periphery.
Without support or reinforcement the ground plasticizes and tends to move towards the opening and can be cause of :

4

- fall of ground from the upper part of the tunnel face
- displacement of tunnel boundary
- tunnel face extrusion and failure

5

To prevent these phenomena it is necessary to use “pre-supporting technique” or to improve and/or to reinforce the ground properties around the tunnel boundary.

How to reinforce the ground

1

Main reinforcing works are based on

IMPROVEMENTS, REINFORCEMENTS, PRE-SUPPORTS, DRAINAGE SYSTEMS

2

along the chainage of the tunnel and in the surrounding ground:
- **permanent : grouting, structural elements, drainage**
- **temporary: freezing, drainage**

3

ahead the face, before the excavation:
- **permanent: steel arches, forepoling, grouting**
- **temporary: drainage**

4

at the face:
- - **permanent: radial bolting, invert**

T- - temporary: drainage, shotcreeting, nailing, removable supports

5

during the excavation, in the surrounding ground:
- - **permanent: compensation grouting**
- - **temporary: drainage**

How to reinforce the ground

1

2

3

4

5

IMPROVEMENT

Methods which improve (from the engineering point of view) the mechanical or hydraulic properties of the rock mass: injecting fluids or freezing the fluids already present in the ground

- permeation grouting
- compactation grouting
- jet grouting
- freezing

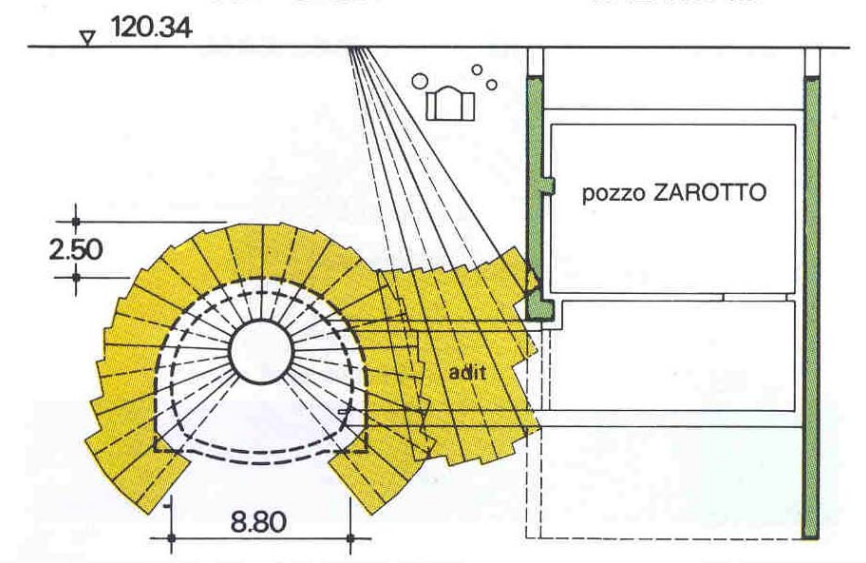

How to reinforce the ground

1

2

3

4

5

REINFORCEMENT

Methods which foresee the insertion, inside the rock mass, of structural elements

- systematic bolting
- micropiles
- cable bolting

Borzoli cavern, Italy

How to reinforce the ground

1

2

3

4

5

PRE-SUPPORT

Methods which foresee the insertion, in the rock mass, of structural elements ahead of the tunnel face with the purpose to create a pre-support of the void before the excavation is carried out

- mechanical precut
- pretunnel
- steel pipe umbrella
- forepoling
- arch of microtunnels
- jet-grouting arch
- reinforced with VTR elements

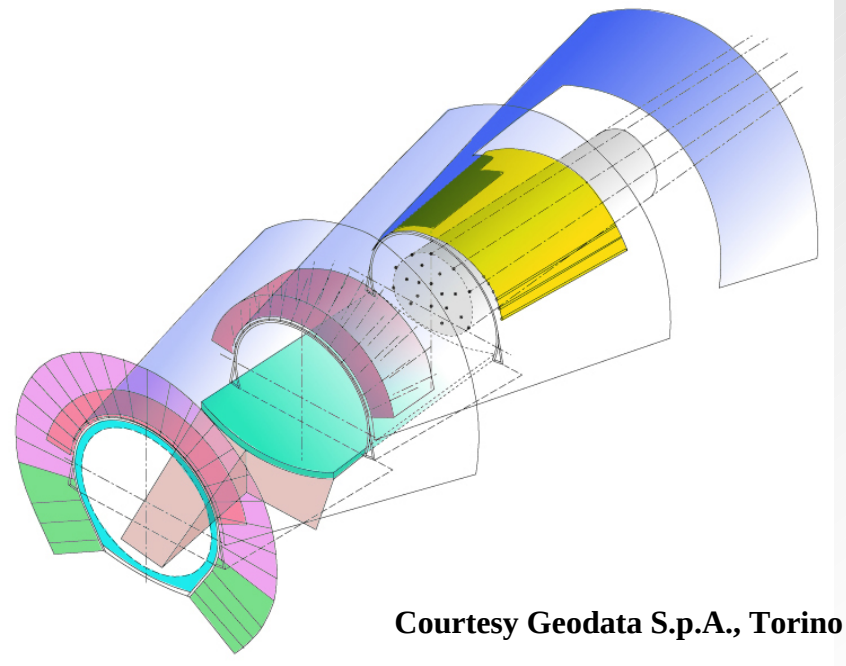

How to reinforce the ground

1

2

3

4

5

mechanical precut

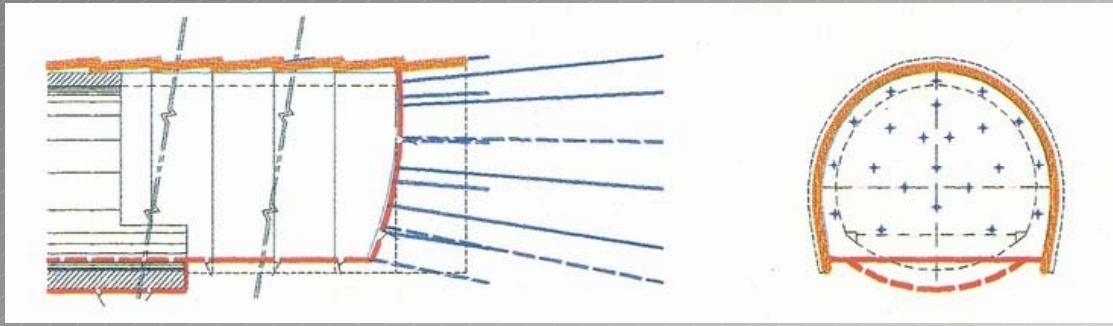

How to reinforce the ground

1

2

3

4

5

steel pipe umbrella

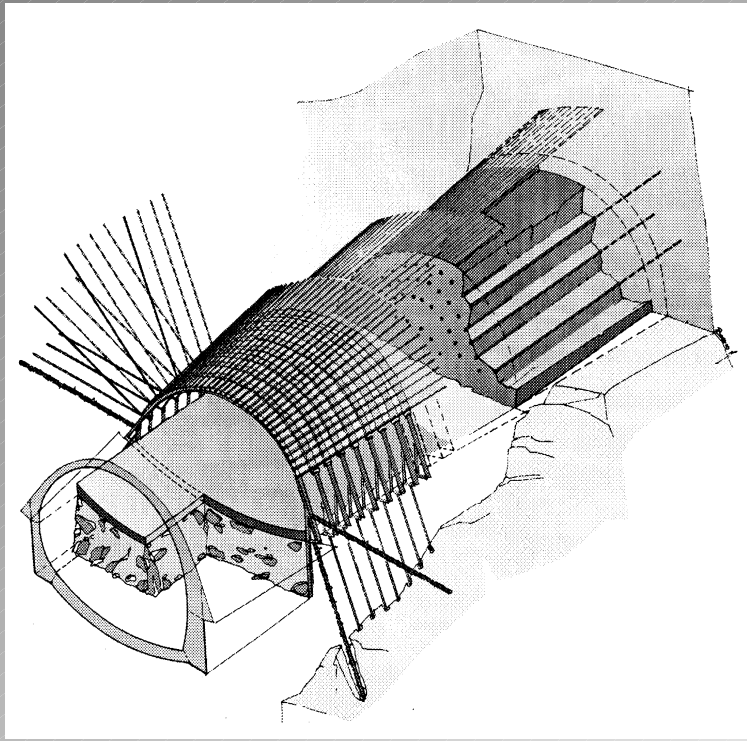

It is possible to cover advance lengths of 12-15 metres, of which 9-12 metres are of excavation, account being taken of the necessary overlap between two sets of pipe umbrella to guarantee the stability of the face.

How to reinforce the ground

1

2

3

4

5

forepoling

Steel pipe umbrella or forepoling is a pre-reinforcement technique which is obtained by installing steel pipes ahead of the tunnel face.

The steel pipes usually have a dip of 5°-10° (with reference to the horizontal) in a way as to form an umbrella with a truncated cone shape and which allows the overlapping of two adjacent fields.

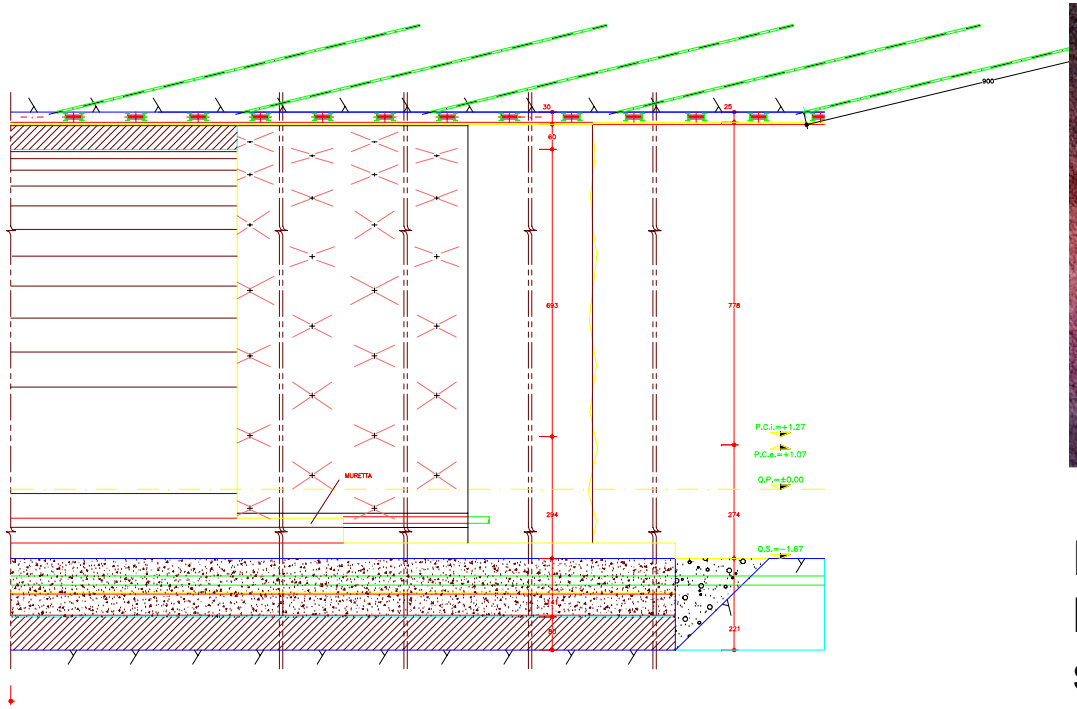

Many application have been carried out using self drilling bolts

How to reinforce the ground

1

2

3

4

5

arch of microtunnels

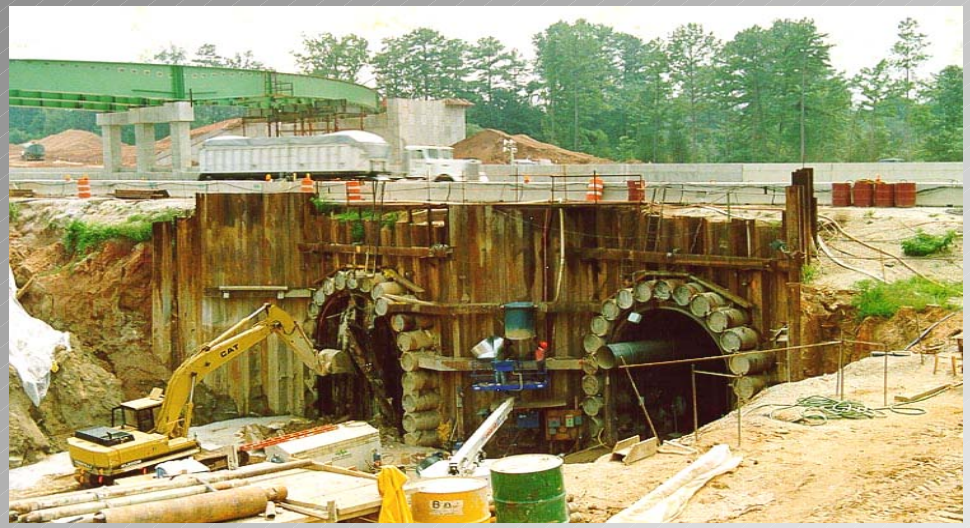

Highway 285 (Atlanta, USA)

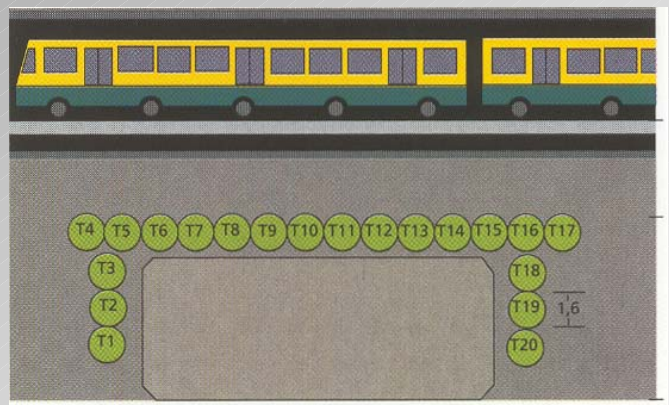

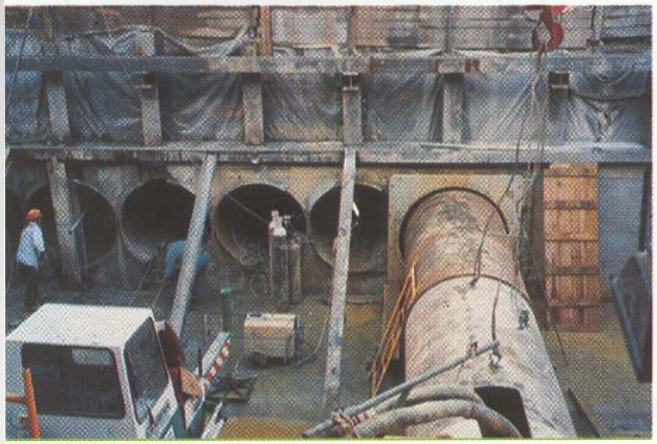

Almaeda (Lisboa, Purtugal)

How to reinforce the ground

1

2

3

4

5

Jet-grouting arch
with or without reinforcement
of the columns

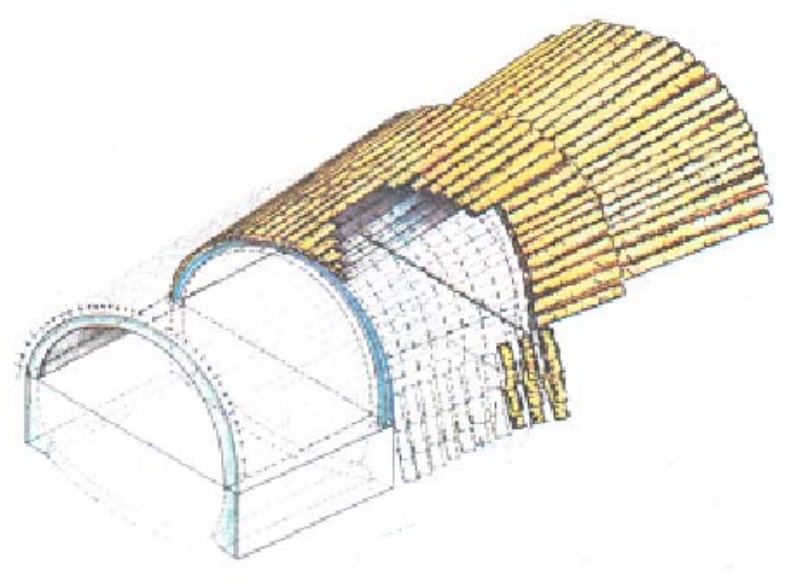

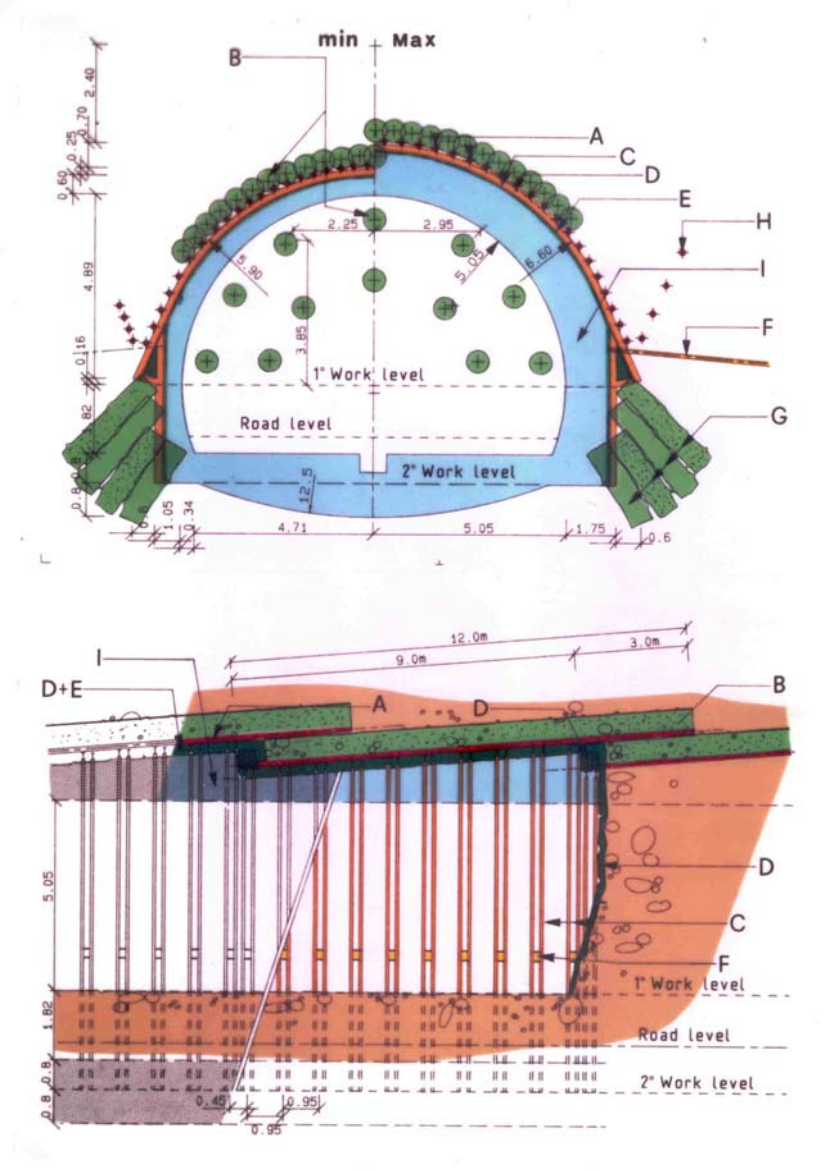

Face stability in conventional tunnelling and EPB soil conditioning

1

2

Example of steel pipe umbrella and face reinforcement with VTR in clay at low depth
Milieu-Gaurain Tunnel (Belgio)

3

4

5

1

2

3

4

5

Tunnel face ground reinforcement is obtained by installing on the tunnel face fibre glass elements (such as pipes or plaquettes) fully grouted

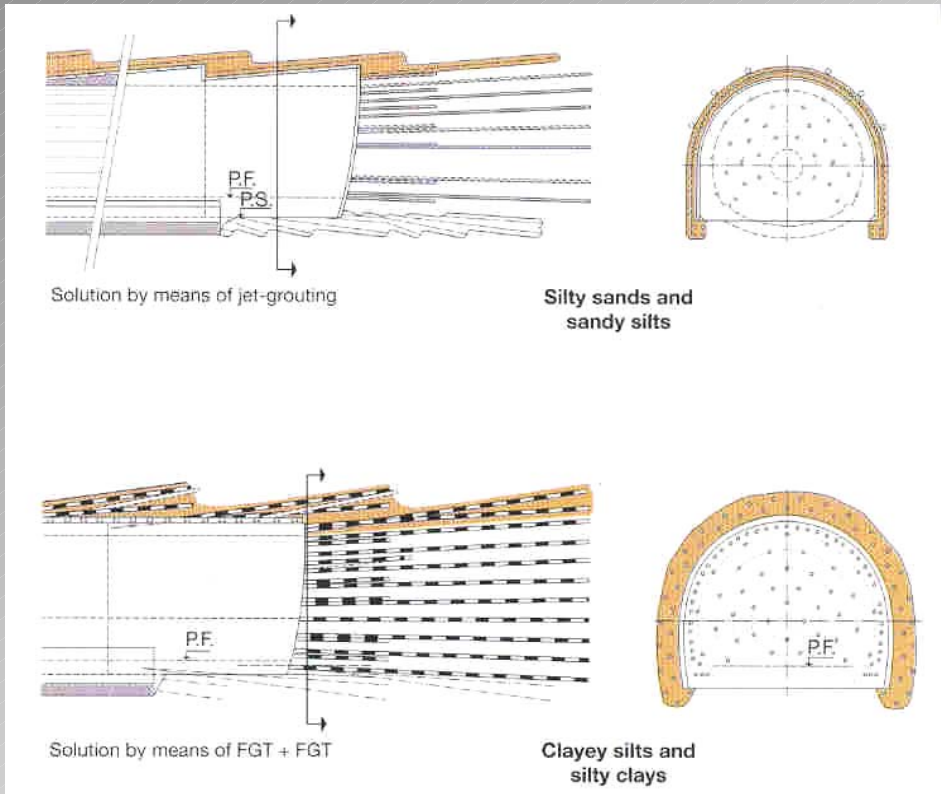

1

2

3

4

5

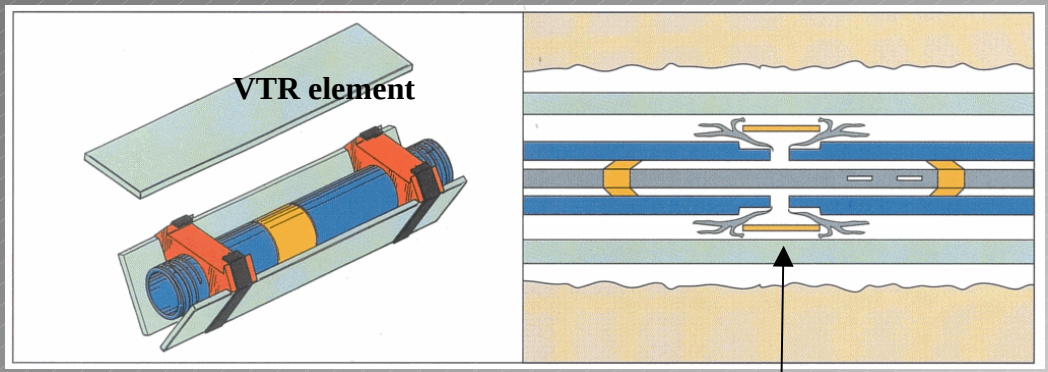

packer

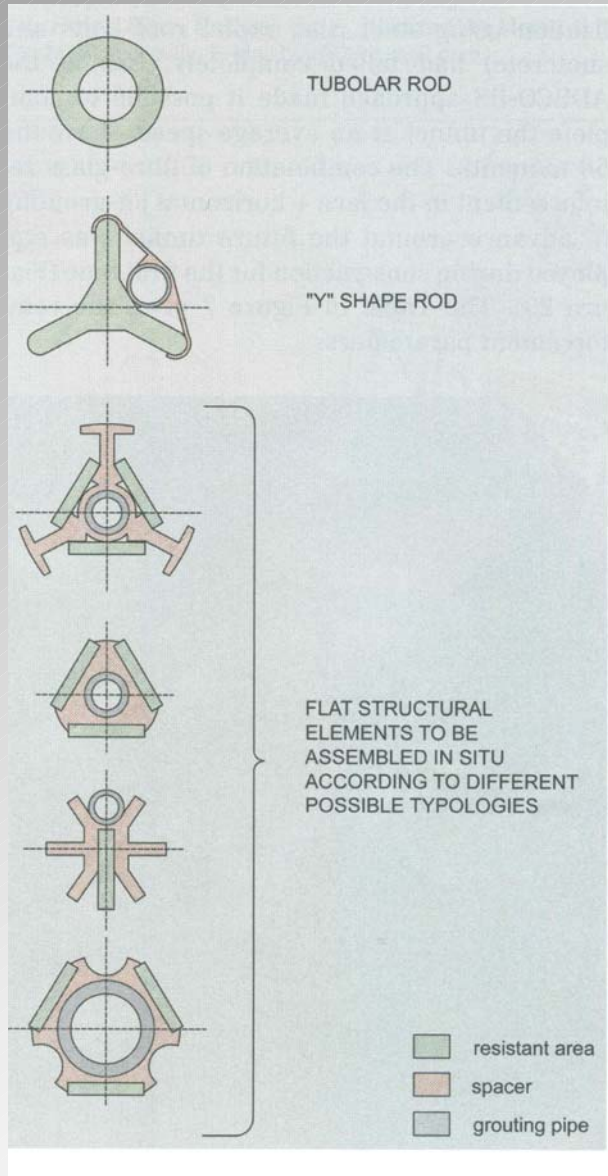

Face stability in conventional tunnelling and EPB soil conditioning

Ground reinforcement used for the construction of the the Bo-Fi highspeed railway (Italy)

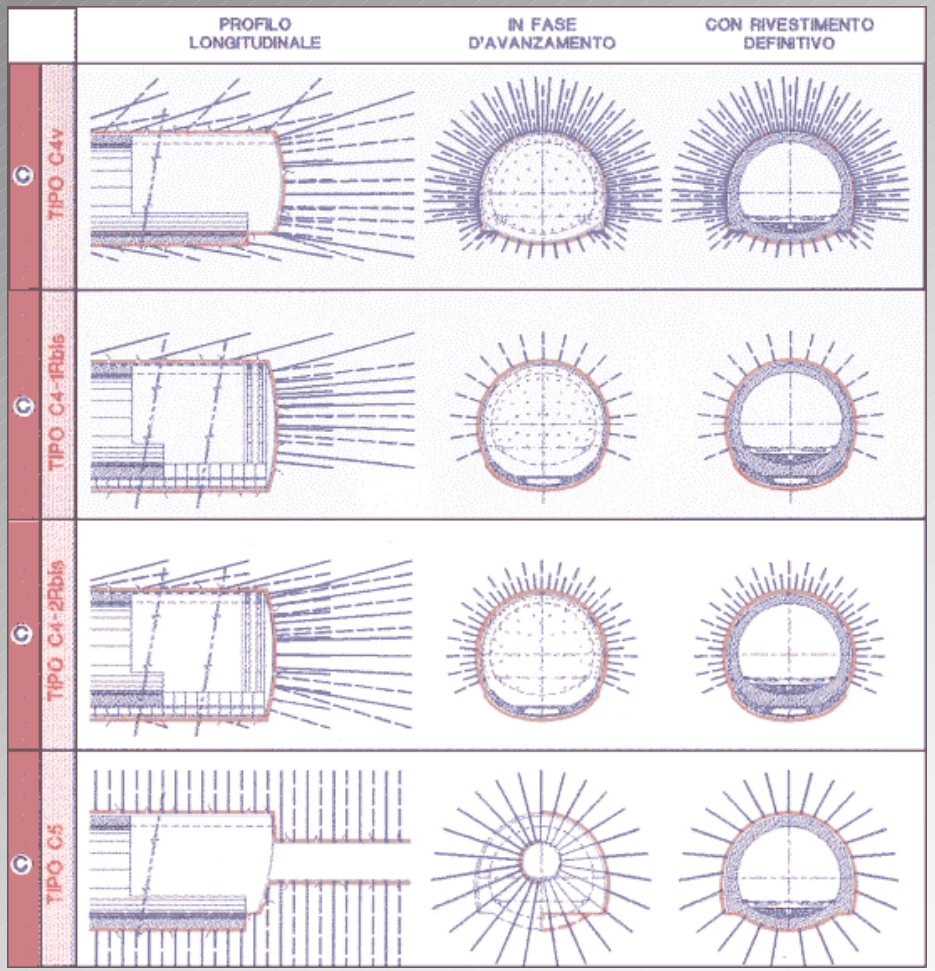

Example of some scheme of ground reinforcement using longitudinal fiber glass reinforcement in Tartaiguille tunnel (France) (Lunardi, 2000)

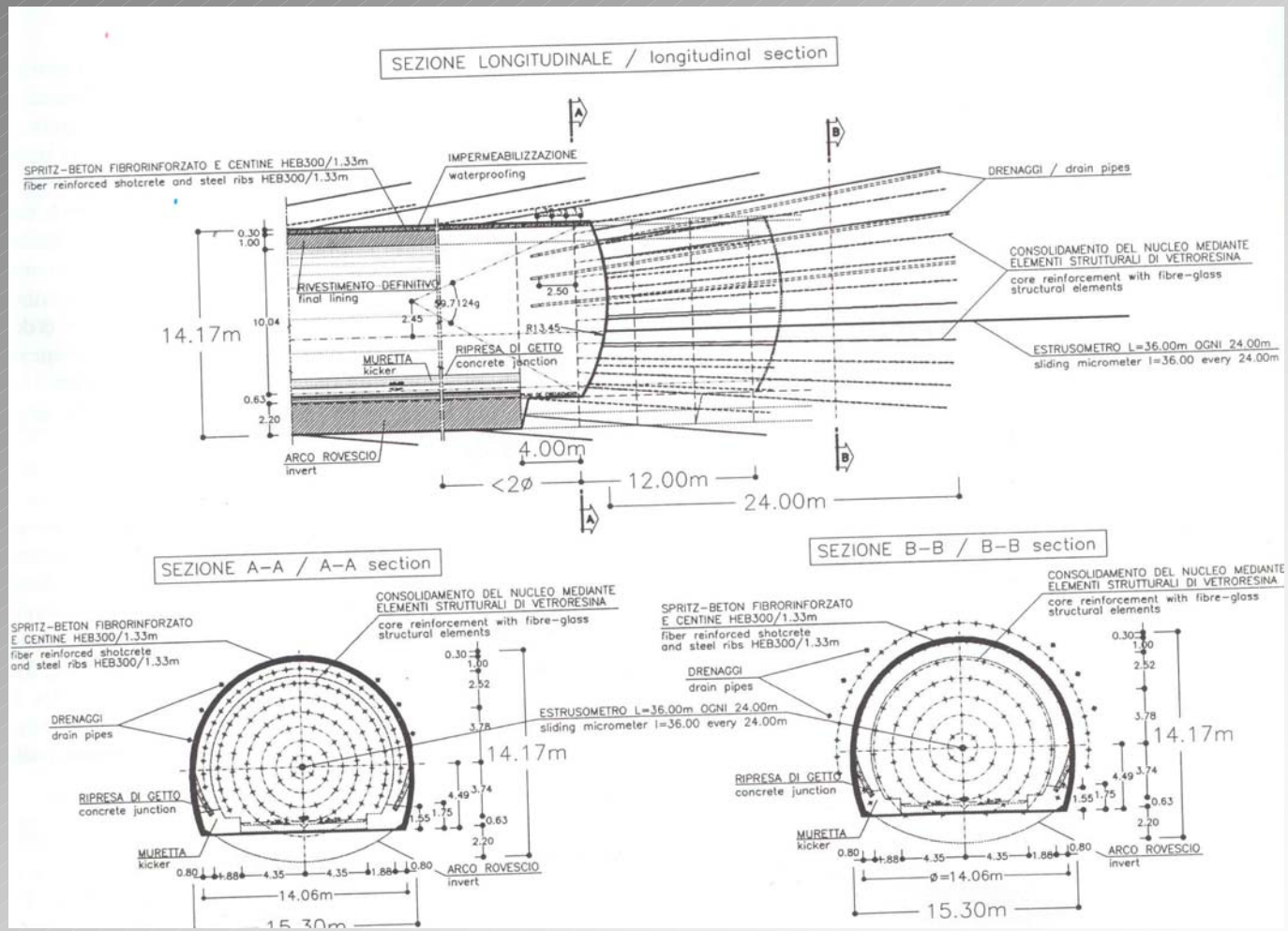

Face stability in conventional tunnelling and EPB soil conditioning

1

2

3

4

5

Tartaiguille tunnel

(France) (Lunardi, 2000)

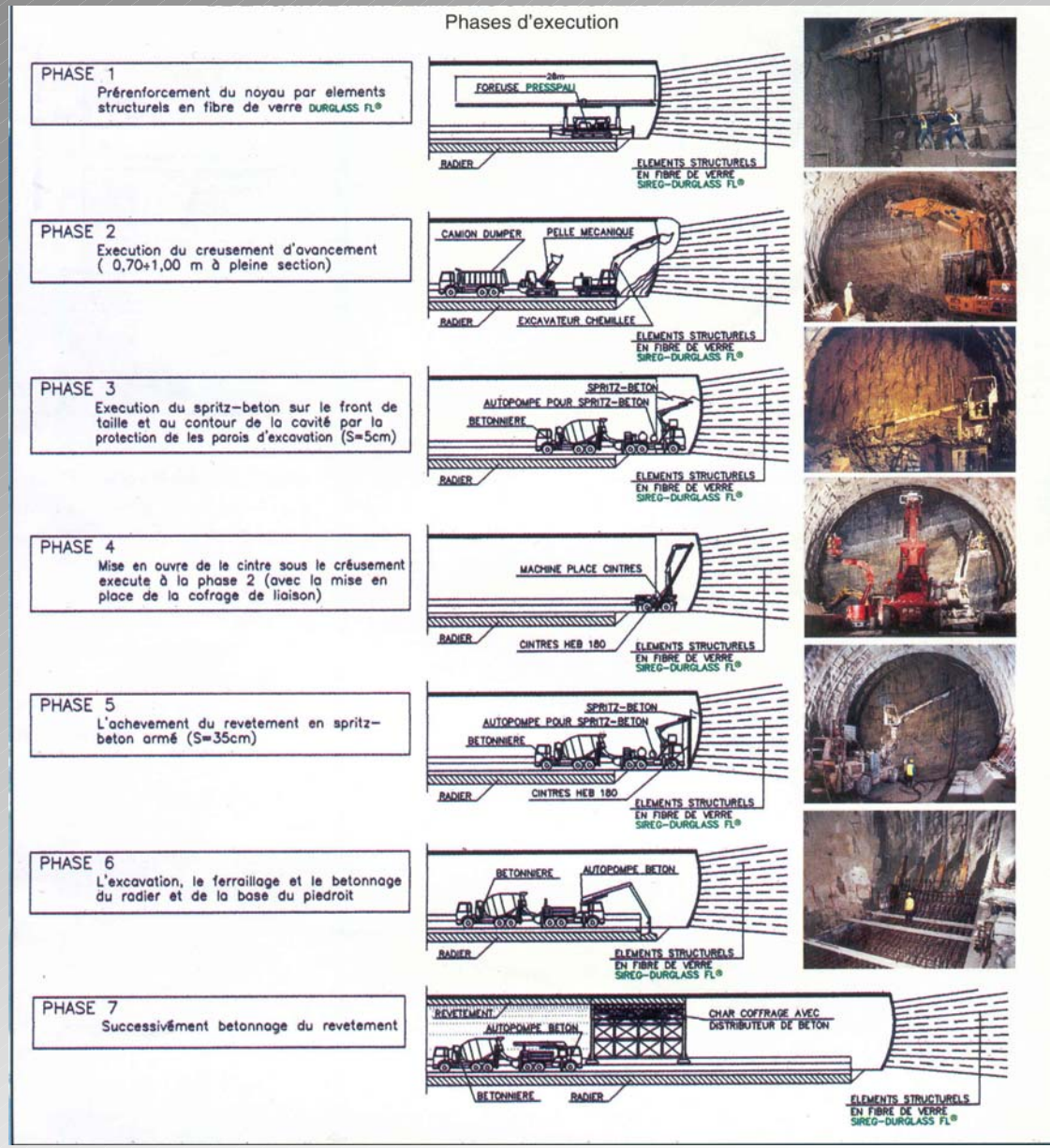

How to reinforce the ground

1

Structural works

2

Railway “Passante” of Turin:
Grouting for sandy gravel soils and
construction of precut concrete walls
for preparation of conventional tunnelling

3

4

5

How to reinforce the ground

1

2

3

4

5

DRAINAGE

Technologies which take away water from the rock mass or the ground in a controlled way

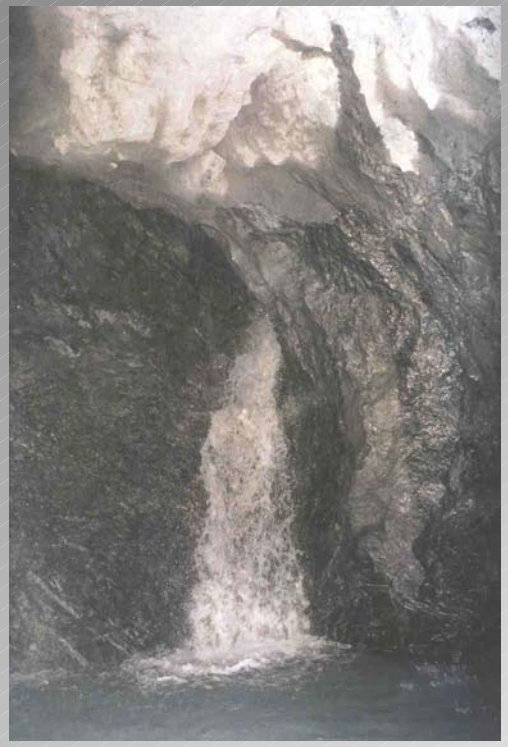

How to reinforce the ground

TYPE OF INTERVENTION	FIELD OF APPLICATION				
	Cohesive terrain	Sandy/gravely terrain	Terrain with boulders	Fractured rock	Complex Formations
grouting	⦿1	●			
jet-grouting	⦿2	●	⦿3		
freezing		●	●		
dewatering	⦿4	●	●	●	
fibreglass elements	●	⦿5		⦿6	●
pilot tunnel	●	●	●	●	●
precut	●	●			
pre-tunnel	●	●		●	
umbrella-arch	●	⦿7	●	●	●

Key: ● Applicable. ⦿ Applicable with special intervention: 1 – chemical grout; 2 - two or three-fluid jet grouting; 3 - steel rebar or pipe reinforced jet grouting; 4 – active dewatering (vacuum pump required); 5 – additional grouting; 6 – high resistance element; 7 – additional grouting (Russo, 2003).

The interventions listed in this table can be combined in order to guarantee safe tunnelling conditions in almost all geotechnical conditions. Grouting, jet-grouting, freezing and dewatering can be normally be applicable also when tunnelling under water table. The other interventions when the tunnel is under the water table must be combined with impermeabilization techniques.

Design approaches

1

2

3

4

5

QUESTIONS

a) Which are the settlement modes?

b) Which are the failure modes?

c) Which are the uncertainties in the geological/preexisting conditions?

d) Which are the methods for design?

ANSWERS

a) Settlements can both be localised or distributed, homogeneous or basin shaped, immediate or progressive and delayed. All the combinations arise from the stratigraphy of the soil, the relation between tunnel size and its depth, the occurance of unexpected old structures, the way of tunnelling and reinforcing. The boundary displacements and stability of a tunnel are always a three dimensional problem.

Design approaches

1

2

3

4

5

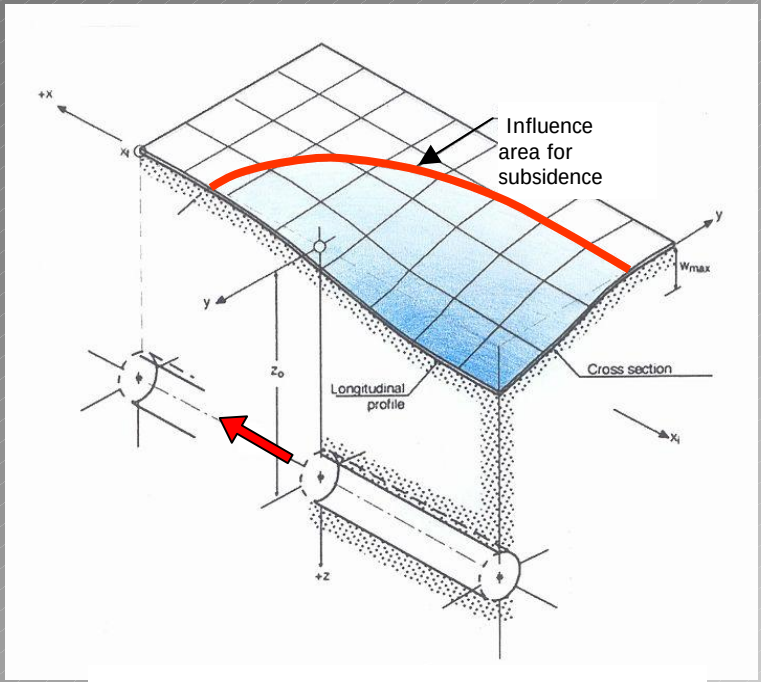

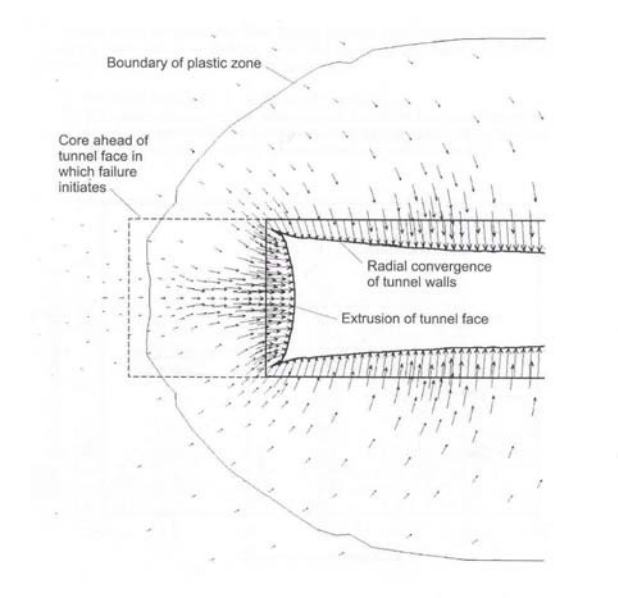

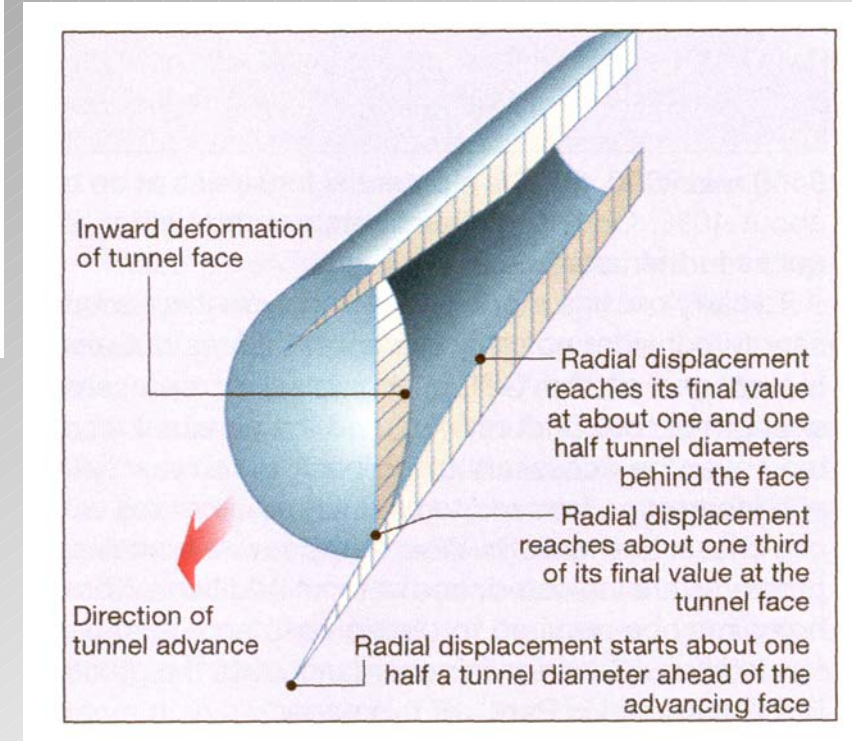

Face stability in conventional tunnelling and EPB soil conditioning

Design approaches

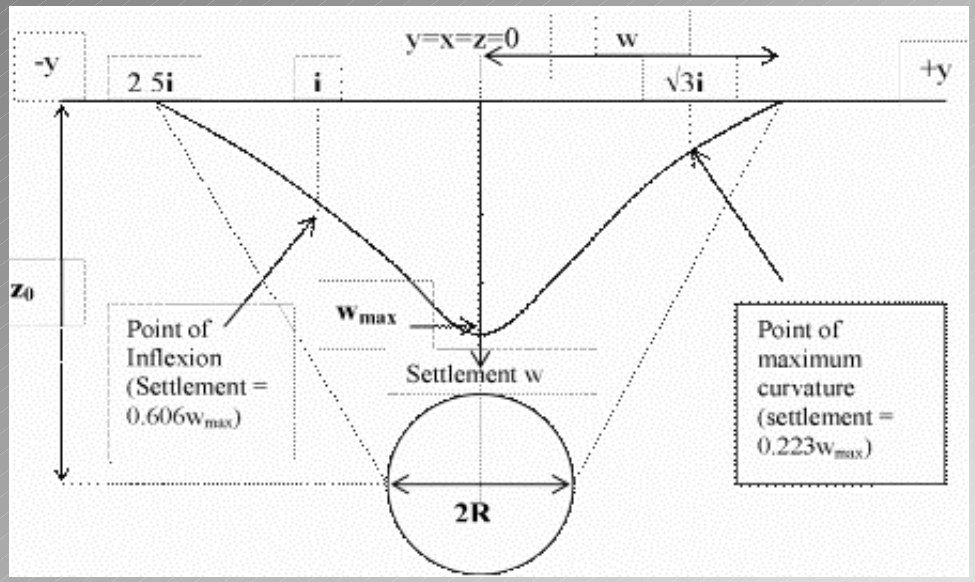

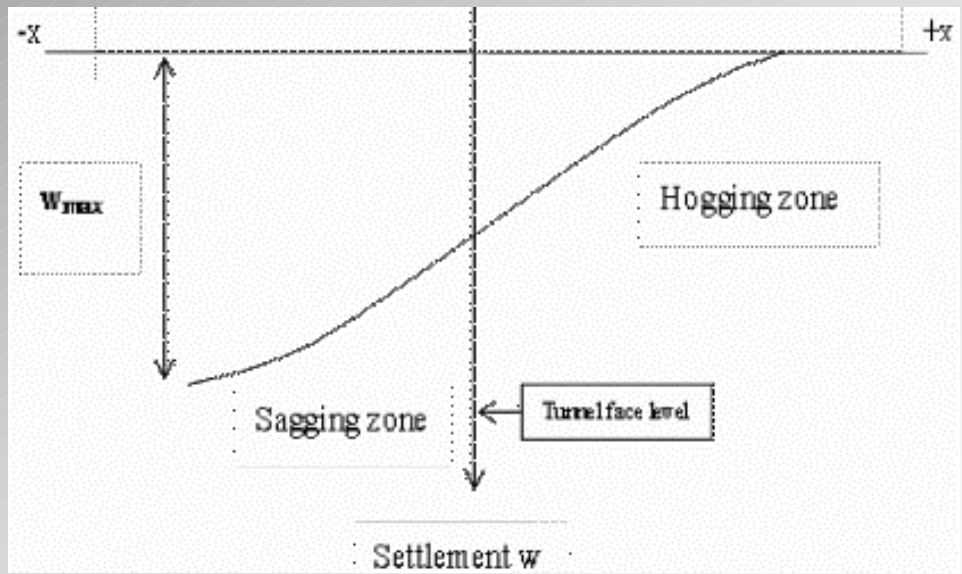

Design approaches

1

2

3

4

5

b) Failure modes

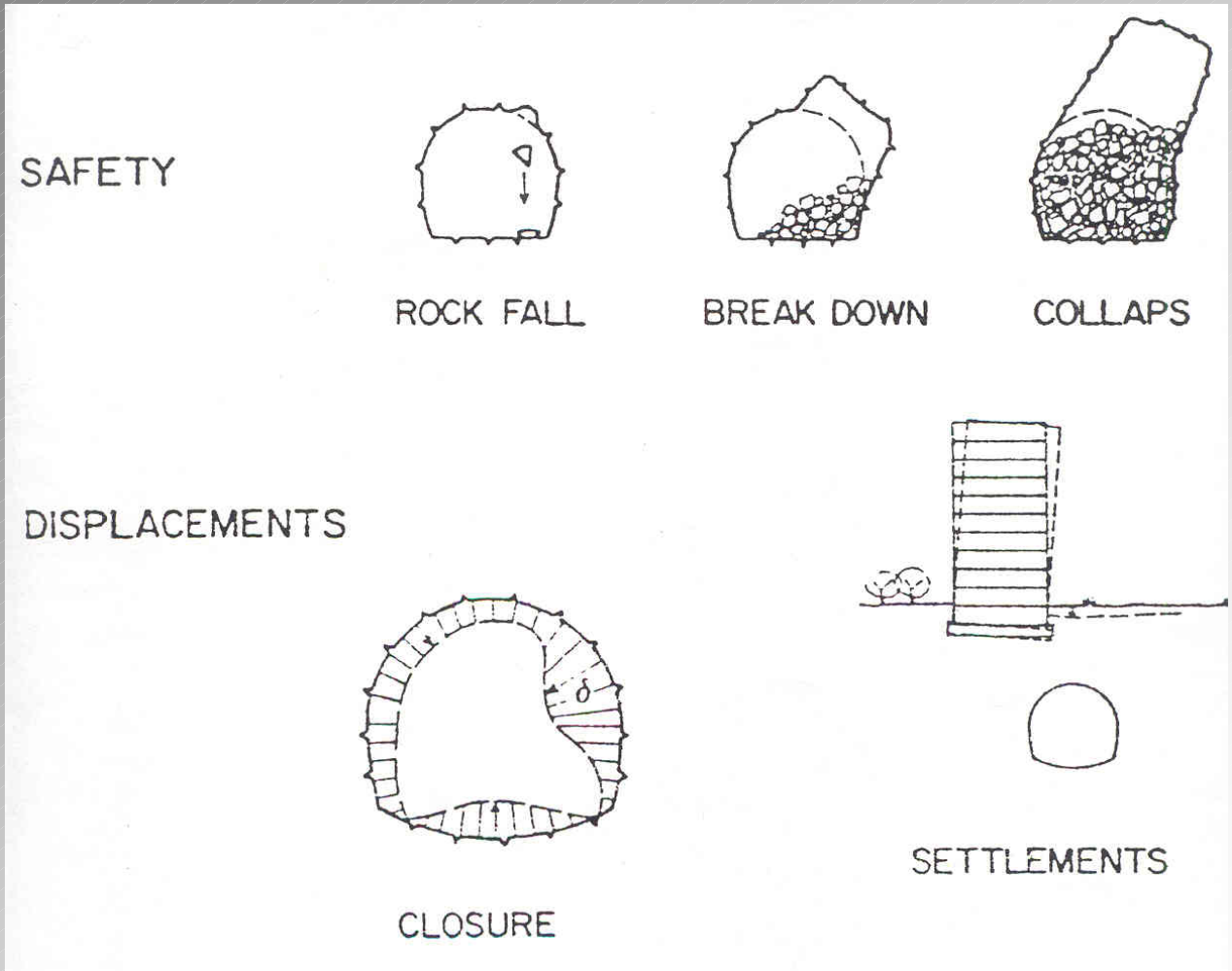

Design approaches

A difference can be put in evidence between cohesive and cohesionless soils

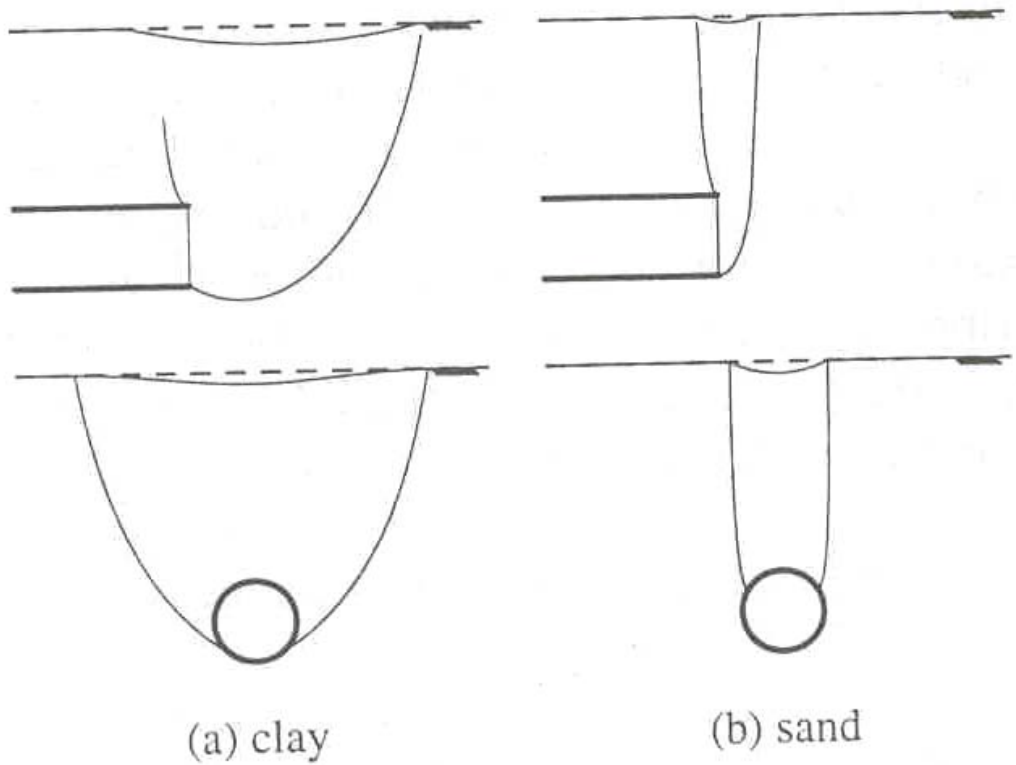

Tunnel near the surface - collapse mechanism: sliding of the ground

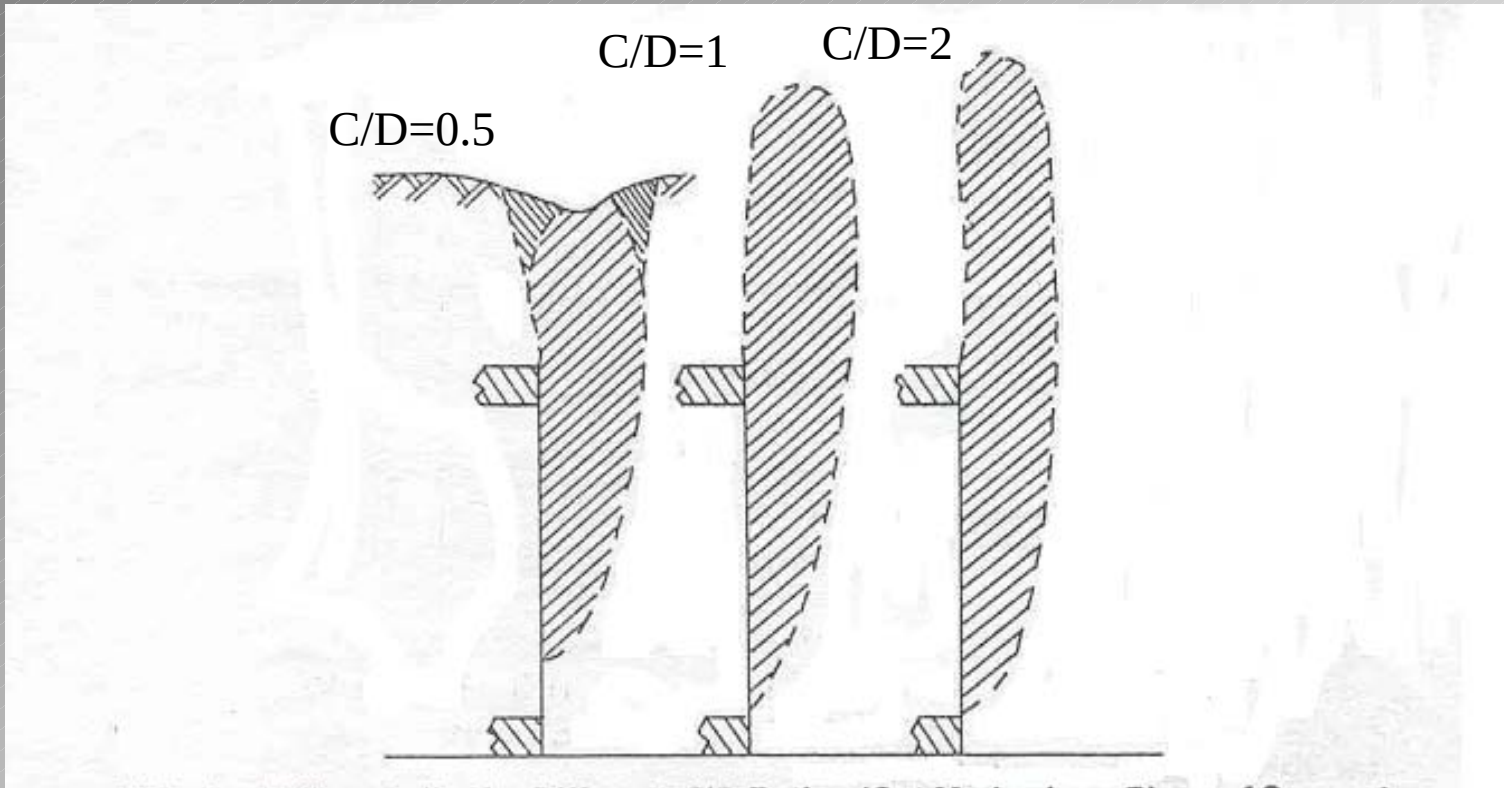

Failure bulbs for different ratio Diameter/depth (Chambon and Corté, 1990)

Tunnel near the surface - collapse mechanism: sliding of the ground

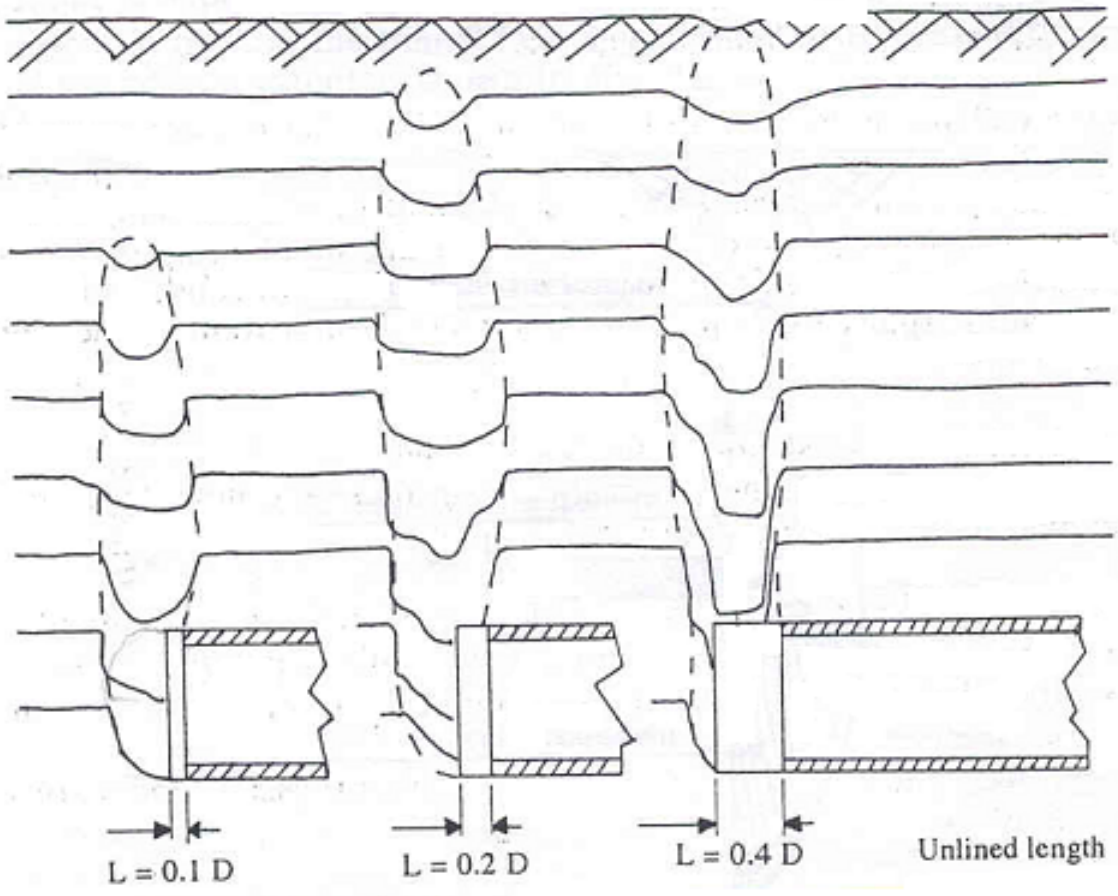

Influence of tunnel unlined length on exent of failure mechanism for C/D=4 (Chambon and Corté, 1990)

Design approaches

1

2

3

4

5

c) uncertainties

In urban areas the uncertainties arise both from the geology, i.e. the occurrence of different layers of soils (clay, gravel, sand, boulders), local phenomena (karst, alteration of outcrops), abd also to man made structures (buolding foundations, old underground facilities). The water level and old fillings can also contribute to make more complex the ground conditions.

36/111

1

2

3

4

5

Example of steel pipe umbrella and permeation grouting in a tunnel portal Doria Tunnel (Genova, Italy) (Courtesy Geodata S.p.A.)

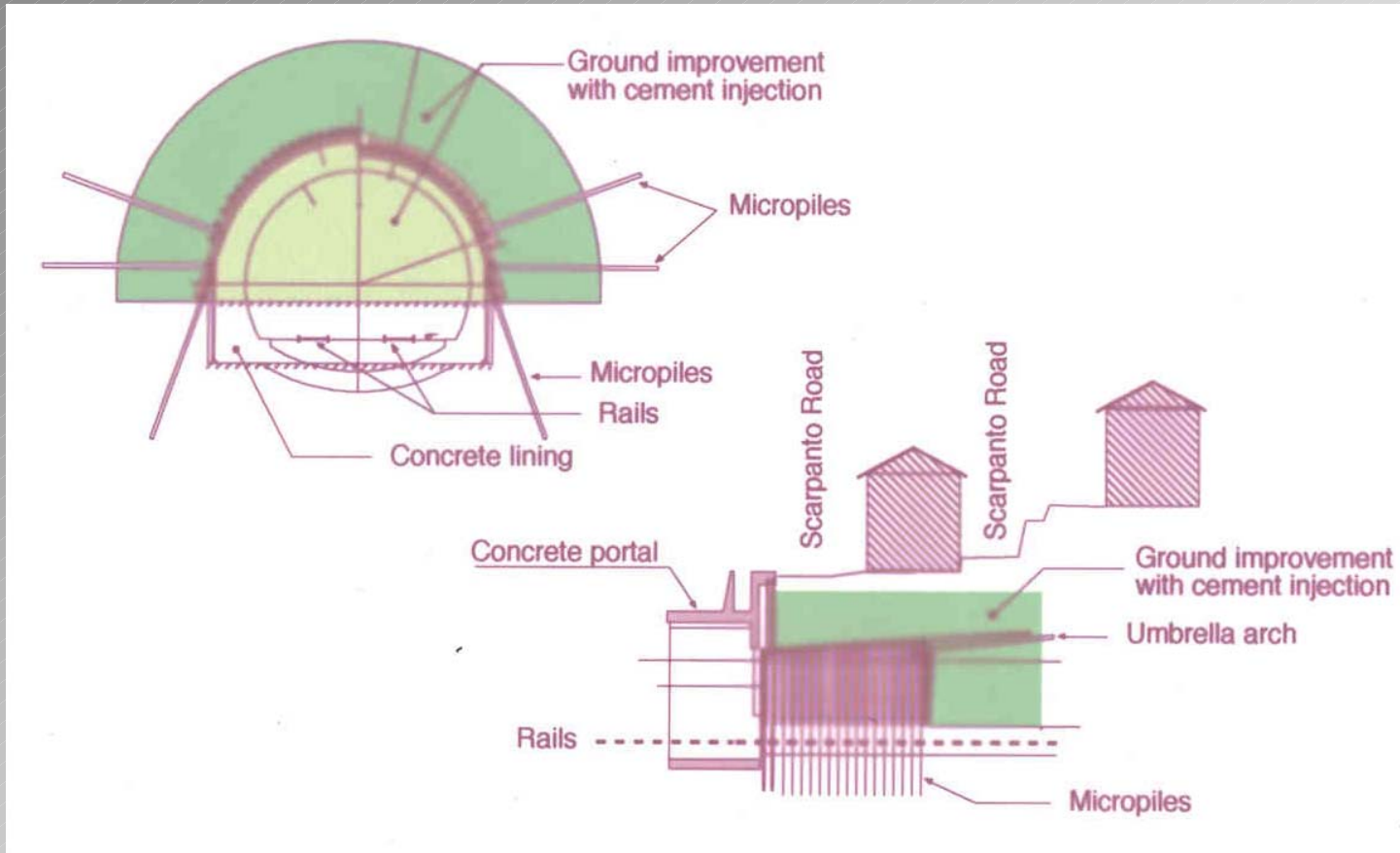

Design approaches

1

2

3

4

5

Face stability in conventional tunnelling and EPB soil conditioning

Design approaches

1

d) Which are the methods for design?

2

Theoretical determination of settlements and face stability remain difficult. However both analytical and numerical methods can be of great help.

3

Analytical: Peck, Leca, Dormieux, Rowe, Panet, Sagaseta, Attewell, Kovari, Mair, O'Reilly, New, Lunardi et al.FE

Numerical: FEM, FDM, PFC, implementing large displacements and interface behaviour.

4

In the design emphasis should be put on the expected failure mode and on the potential consequences on the structures above the ground.

5

Evaluation of face reinforcement action

1

2

3

4

5

Temporary support pressure on the face

$$\sigma_t = \min\left[\frac{4N_b A\sigma_b}{\pi D^2}; \frac{4N_b s_l \tau_a}{\pi D^2}\right]$$

Peila, 1994

where:

Nb = number of VTR pipe; A = cross section of the VTR pipe; Sl lateral surface of the pipes, τa = shear stress on the lateral surface of the pipe; σb= yielding stress of the pipe material

Evaluation of face reinforcement action

1

Improvement of choesion of the ground

2

$$c^* = c + \frac{1 + \text{sen}\ \varphi}{2 \cdot \cos\ \varphi} \cdot \Delta\sigma_3$$

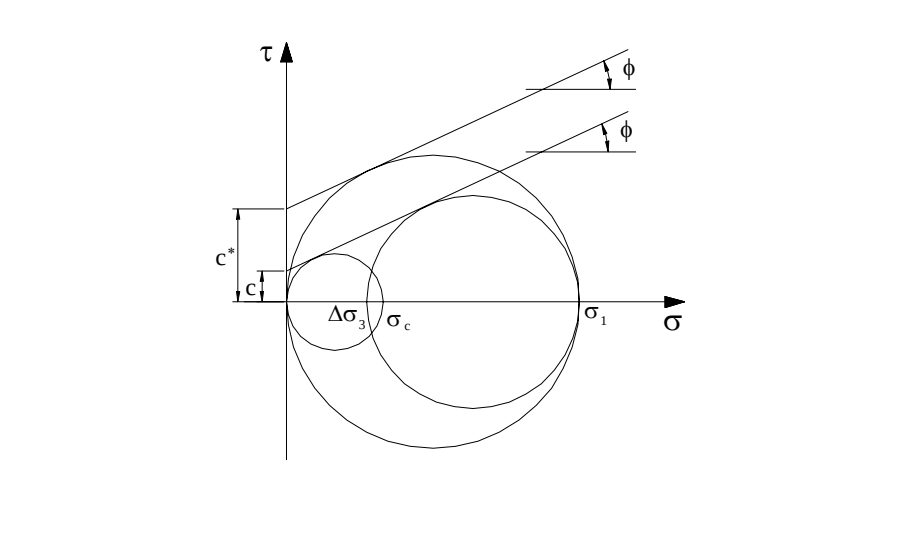

3

$$\Delta\sigma_3 = \frac{n \cdot T_{max}}{S}$$

4

T_{max}= max force of sliding between the reinforcement and the ground

5

Stability analysis below the pre-support

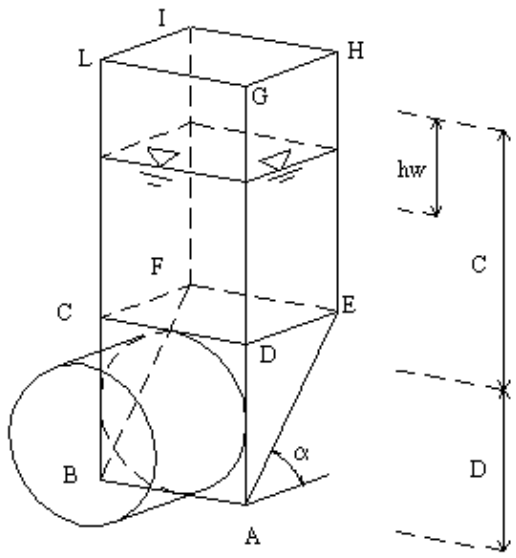

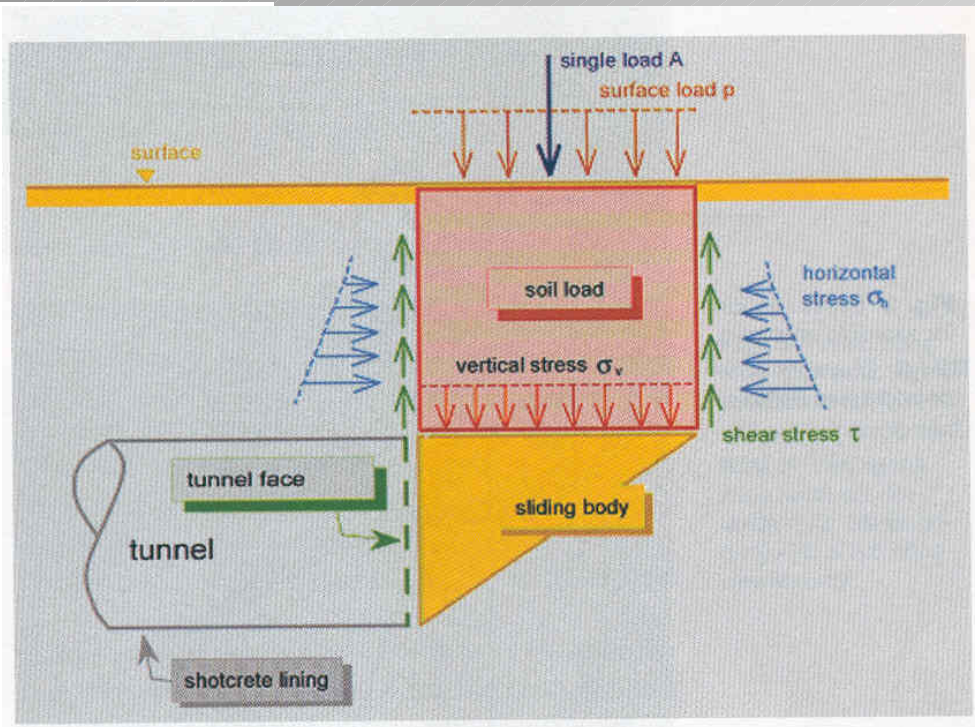

Horn model (1961) which was assumed by Anagnostou and Kovari (1994,1996) as the base for the stability analysis of the face ahead of Slurry Shield and EPB machines. The some model can be applied for face nailing calculation.

Stability analysis below the pre-support

1

2

3

4

5

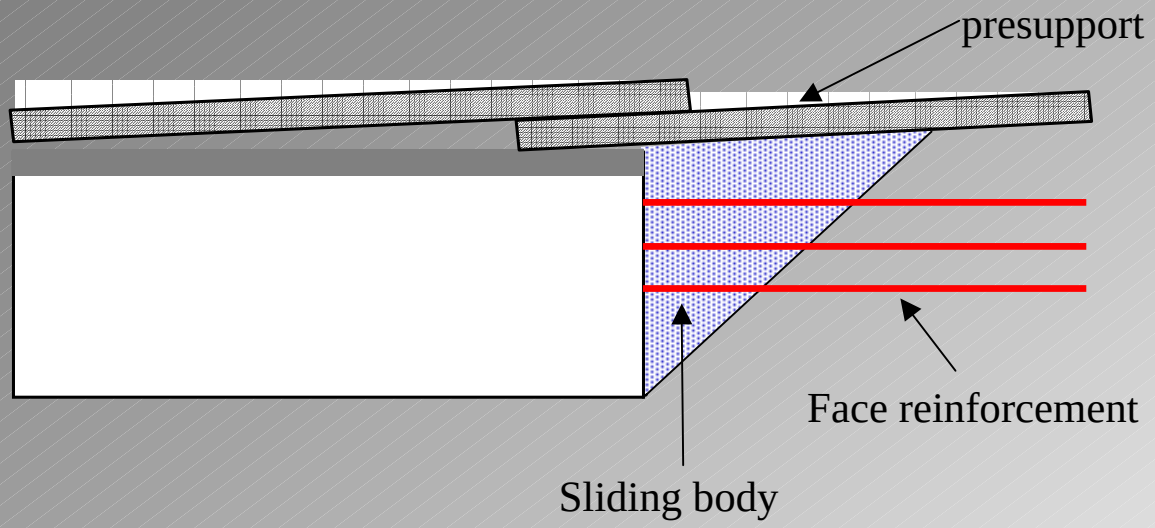

Evaluation of the forces in the nails based on Soil nailing approach

(Raccomendation Cluterre, 1991)

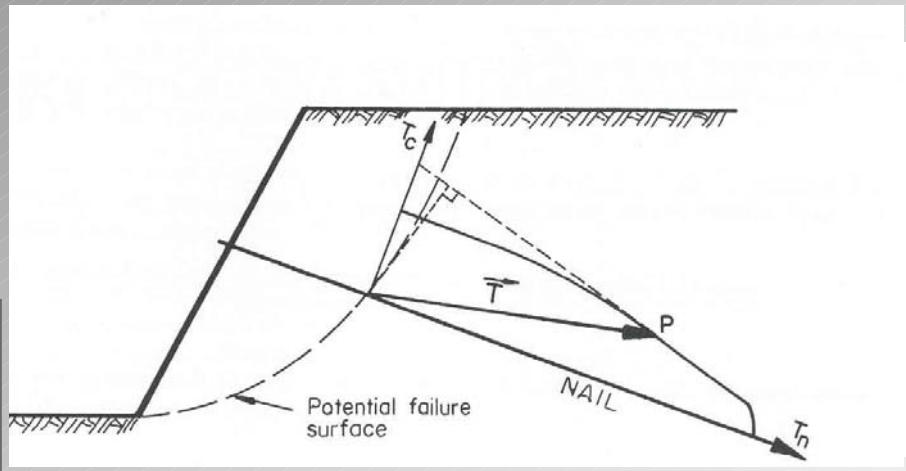

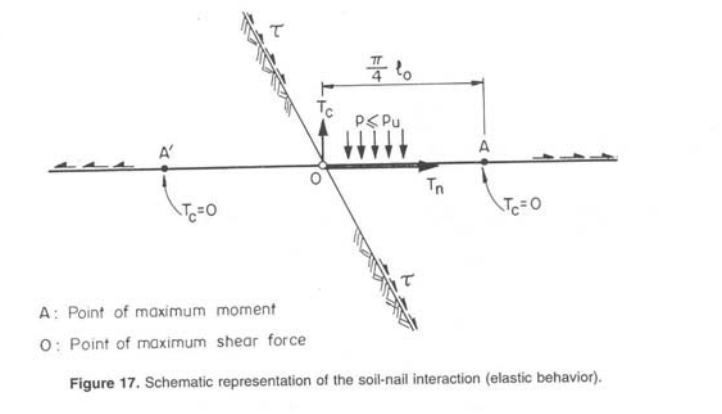

Figure 17. Schematic representation of the soil-nail interaction (elastic behavior).

Evaluation of face reinforcement action

1

2

3

4

5

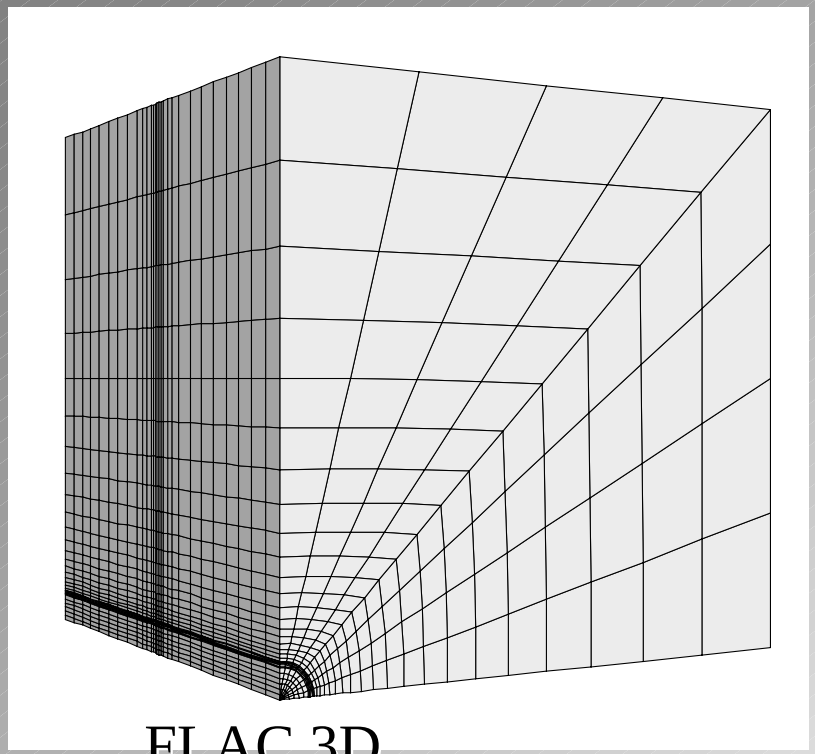

FLAC 3D

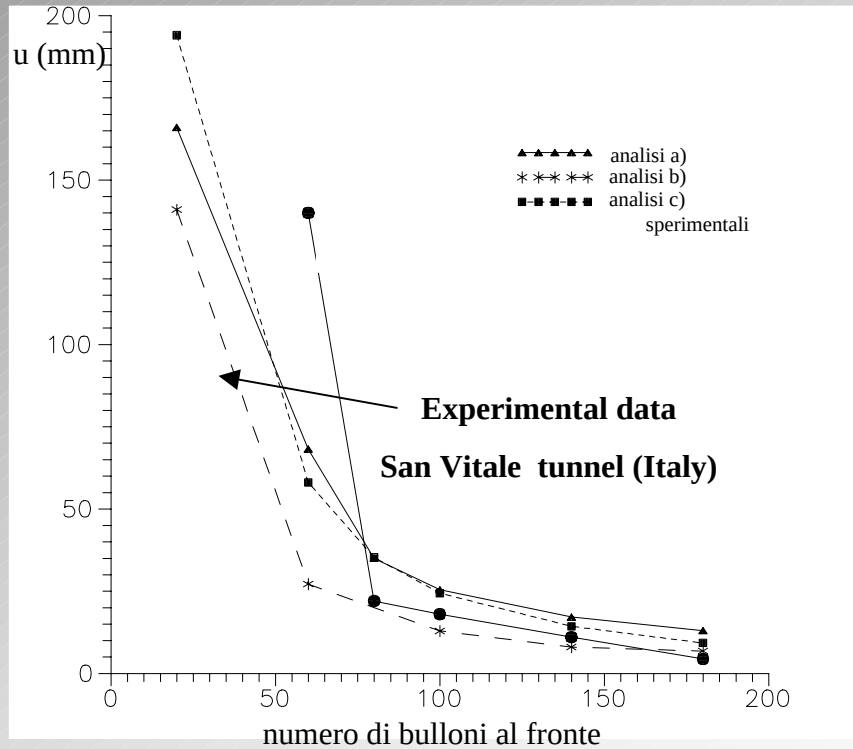

Cohesion increment ⟸

Rock reinforcement (a)
Applied pressure (b) ⟹ $P_{face} = \min\left\{\frac{n \cdot A \cdot \sigma_{adm}}{S}; \frac{n \cdot s_l \cdot \tau_{adm}}{S}\right\}$
Modelling of the single pipes (c)

Example of 3D numerical computation

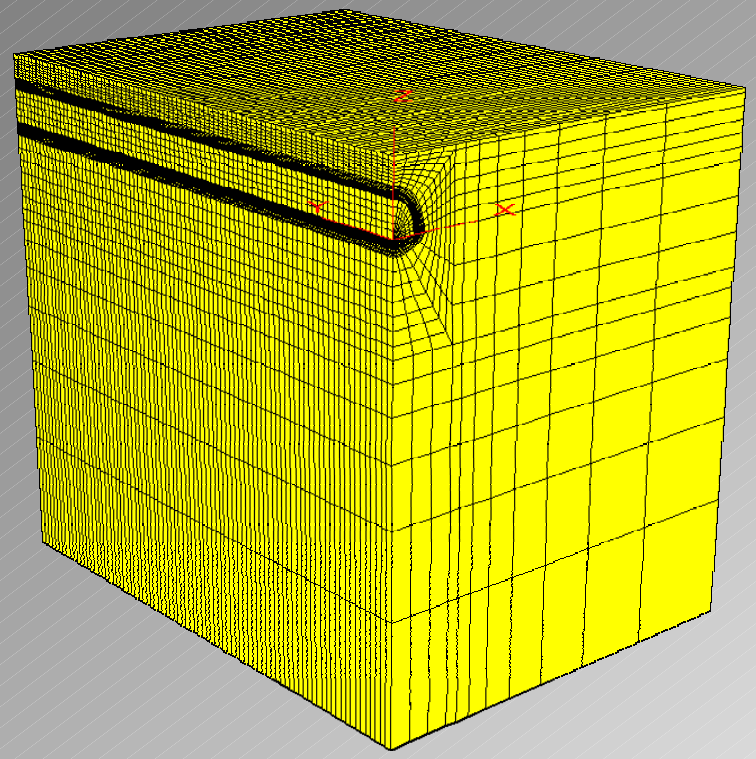

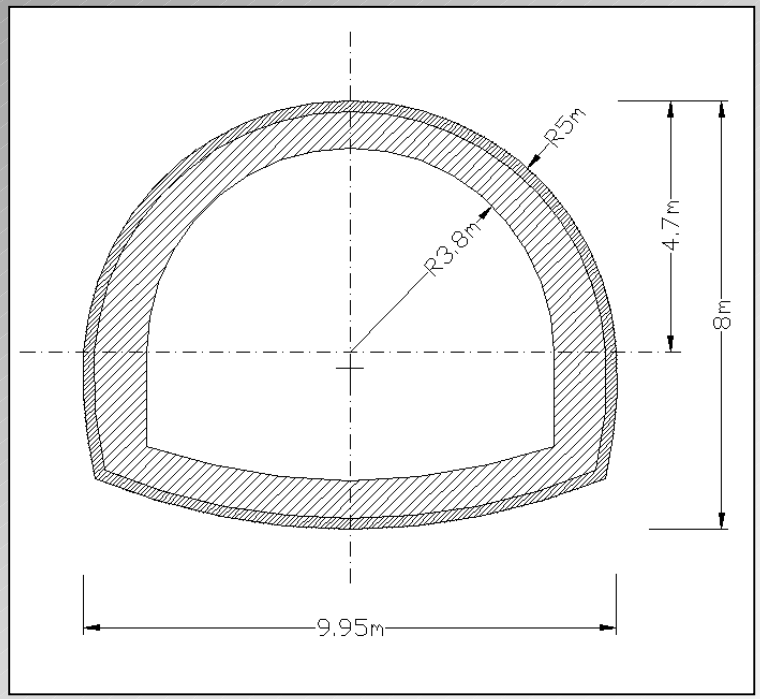

Depth 5m

Example of 3D numerical computation

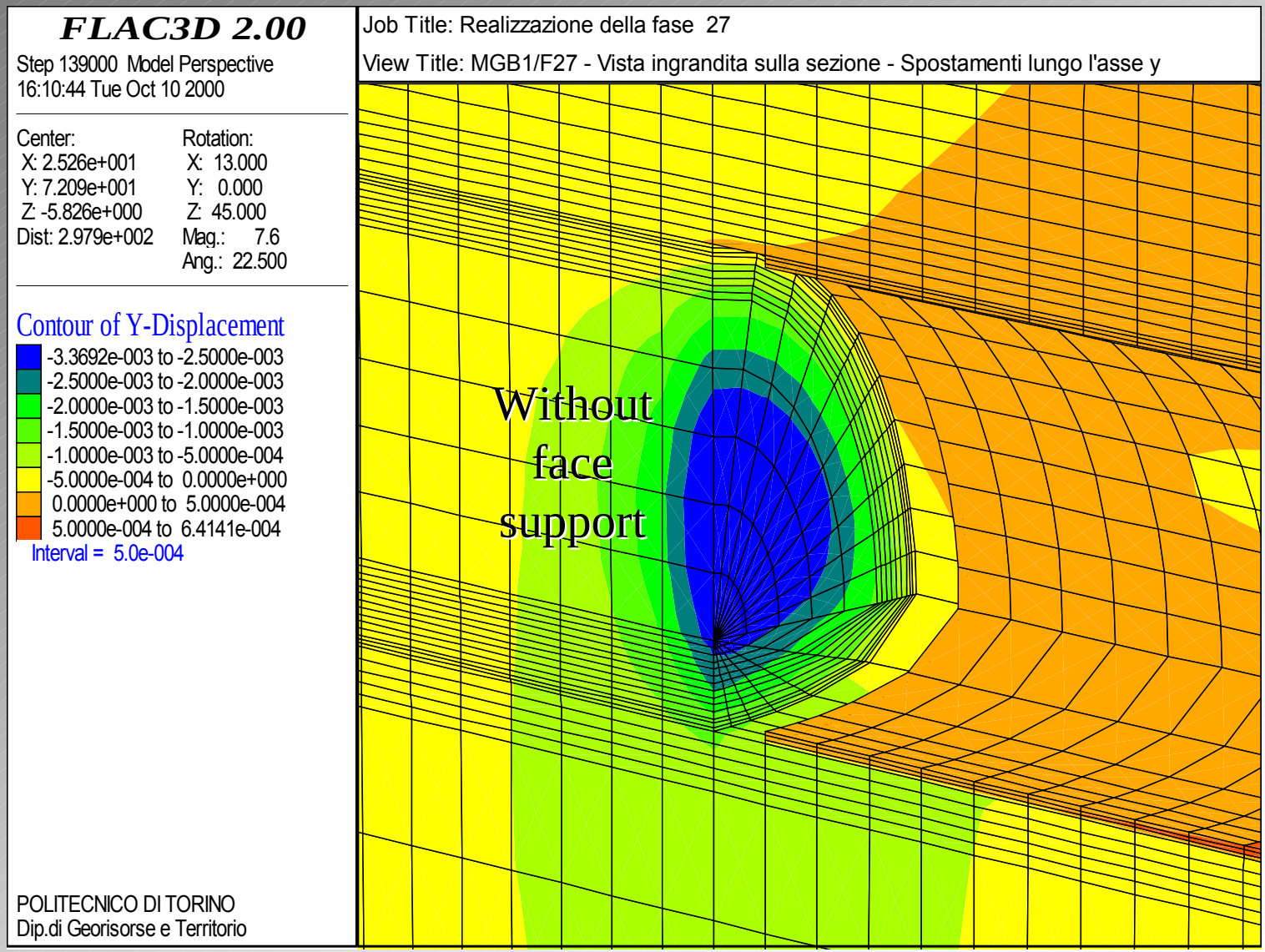

Face stability in conventional tunnelling and EPB soil conditioning

Example of 3D numerical computation

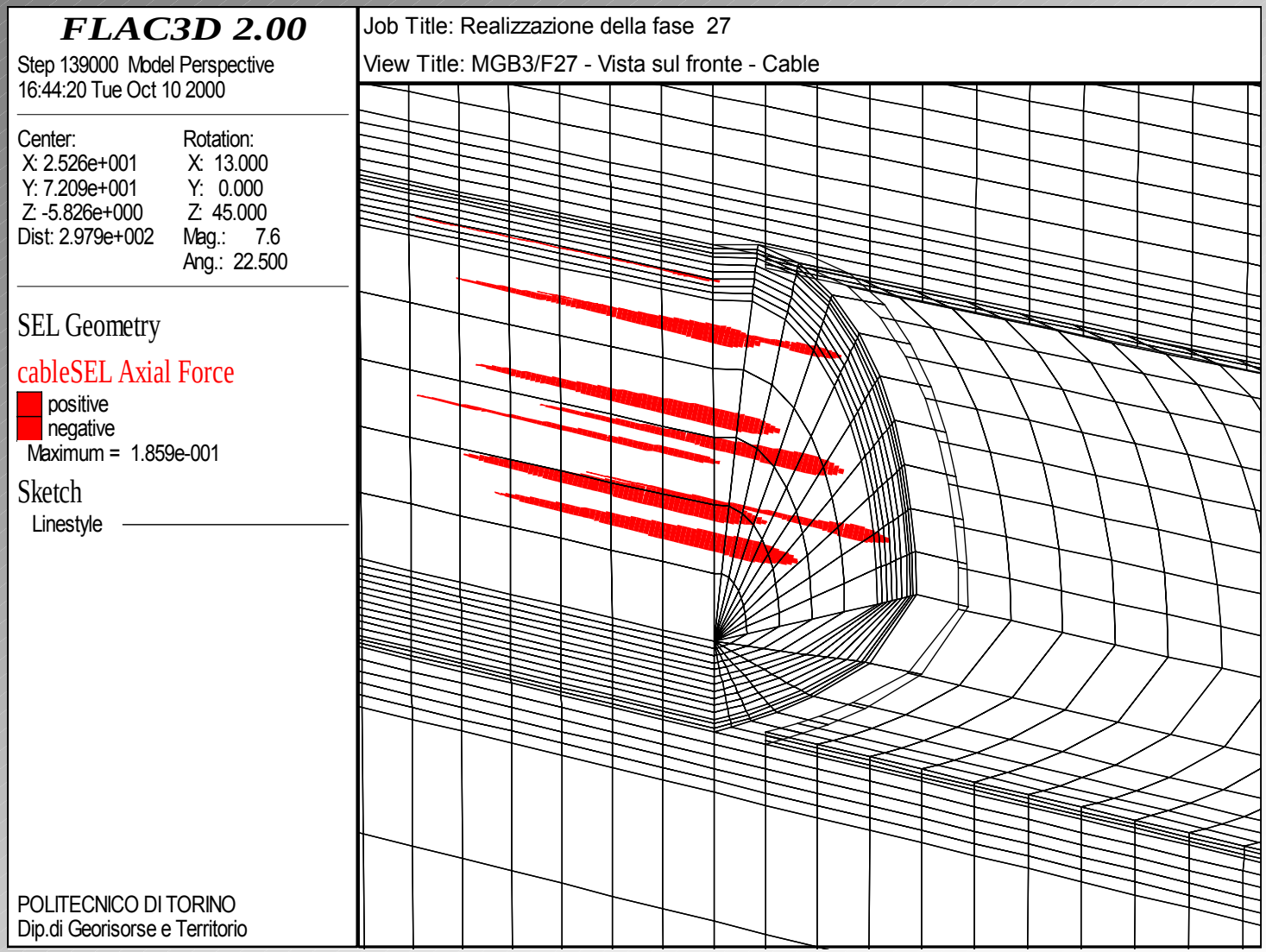

Example of 3D numerical computation

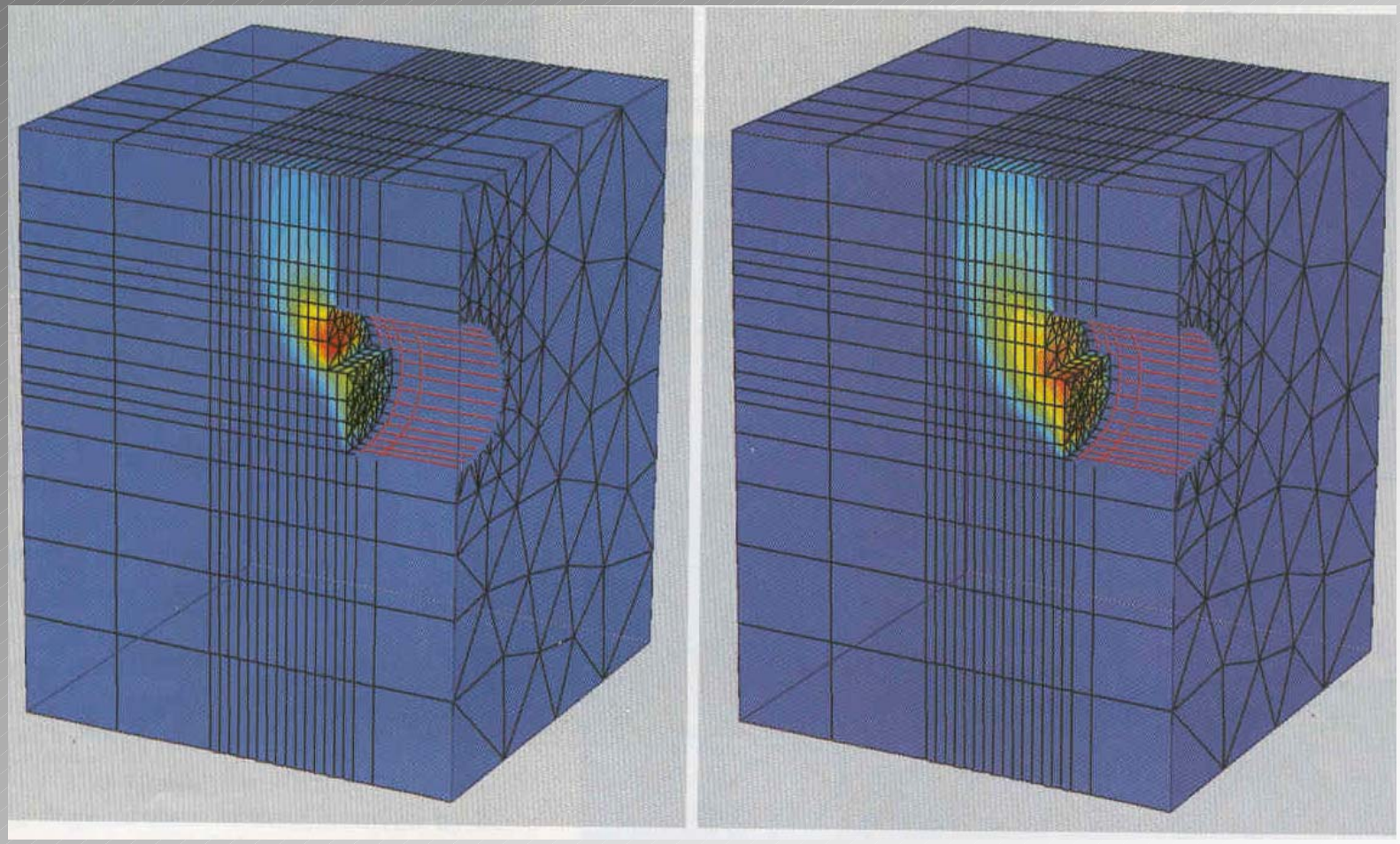

Contour lines of total displacement for overburden of H/D=0.5 for different length of reinforcement left:12m rigth: 4m(Schweiger and Mayer, 2004)

Design approaches

1

2

3

4

5

All the methods for design are linked to an operative phase:

the following main actions of the reinforcing techniques can be defined and designed:

- methods which modify the convergence-confinement curve

- methods which modify the radial displacement at the face

- methods which guarantee the stability of the free span

- methods which guarantee the local stability of the face

- methods which guarantee the stability of local volumes

- methods which control water inflow

Conclusions and references

1

In order to obtain a comprehensive control of tunnel face stability, it is helpful to consider:

2

- the boundary conditions (tunnel size, interferences, water conditions)

3

- the geological - geotechnical model (detailed characterization, with emphasis on the investigation and testing)
- the adoption of proved reinforcing methods

50/111

4

- the validation of both analytical and numerical methods of design
- the monitoring of both the tunnel excavation and of neighbouring structures

5

- the availability of data base of case histories, wich represent the true tool to maintain the sensibility to the variety of actual conditions in urban or shallow tunnelling

Conclusions and references

1 Among the others, it is possible to list the following titles:

R.Peck “Deep excavations and tunnelling in soft ground”

P.Chambon, J.F. Corté “Shallow tunnels in cohesionless soils: stability of tunnel face”

2 C.W.W. Ng, G.T.K Lee “A three dimensional parametric study of the use of soil nails for stabilising tunnel faces”

E.Leca, L.Dormieux “Upper and lower bound solutions for the face stability of shallow circular tunnels in frictional materials”

3 E.Leca, M.Panet “Analisys of tunnel front stability using the yeld calculation approach”

C.Yoo, H.K.Shin “Deformation behaviour of tunnel face reinforced with longitudinal pipes; laboratory and numerical investigation”

4 C.Yoo “Finite element analysis of tunnel face reinforced by longitudinal pipes”

P.Lunardi “The design and construction of tunnels using the approach based on the analysis of controlled deformation in rocks and soils”

L. Cornejo, “Instability at the face: its repercussions for tunneling technology”

G.Anagnostou, K.Kovari “The face stability of slurry shield driven tunnels”

5 G.Anagnostou, K.Kovari “Face stability conditions with Earth pressure balanced shields”

ITA AITES WG Research, “Settlements induced by tunnelling in soft ground”

The 3rd Training course
TUNNELLING IN URBAN AREA
Prague, 4-5th May 2007

Face stability and EPB soil conditioning Part 2

Prepared by “D. Peila”

Prague - 2007

Index

Introduction

1

2 Full face TBM tunnelling is undergoing great development throughout the world

3

In long tunnels and/or in difficult geotechnical conditions as exist in many urban areas, the use of TBM is imperative:

4

to reduce the risks for the urban environment

to increase the safety of the working site

5

to reduce excavation time

TBM face stability control

1

When tunneling with full face machines in urban areas there are some specific aspects that influence the tunnelling risks and that must be taken into account in the design and the construction procedures

2

Urban environment

3

Shallow overburden
Structures on ground surface
Foreign objects in ground
Constraints for alignment
Restriction for: impossibility of road closure; place of attack, material transport, access to TBM, exploration and carring out of auxiliary measures (i.e. ground reinforcements), high visibility of damage

4

Geological and hydrogeological conditions

Properties of the recent geological formations
Presence of a man made filling (sometimes of unknown depth)
Frequently changing „geo“ conditions
Presence of ground water

5

Non-perfect (i.e. not as designed) performance of the tunneling method i.e. of the TBM

TBM face stability control

1

An optimal design must be based on risk analysis and risk management which must adddress the decision and chioce to be taken and also influence the construction management.

2

3

In fact this approach permits after the identification of all potentential hazards, to assign to each of them a proability of occurrence and to allocate an index of gravity-severity to the consequences.

4

With this picture in mind is possible to define:

- the solutions to be used to reduce the probability of occurrence of negative events

5

- the counter measures for reducing the gravity of the consequences of a negative event.

(Kovari, 2000, 2004; Guglielmenti et al. , 2002; Guglielmetti, Mathab, Xu, 2007)

TBM face stability control

1

2

3

4

5

The most relevant risk scenarios in urban area when tunnelling with full face machines inside a soft soil are:

Limiting condition for the machine (that is to say a condition for which the machine is not working as designed)

- eccessive wear of the tools
- eccessive wear of conditioning agents, grease, ect.
- etc.

Interferences with the local enviroment and accidents

- face collapse which can reach the surface
- damage of already existing constructions
- underground water pollution
- etc.

TBM face stability control

1

In the present lecture we will analyse the problem of face stability which can cause the following type of accidents

2

- face collapse which can reach the surface
- damage of already existing constructions both on surface or underground (i.e. subsidence)

3

4

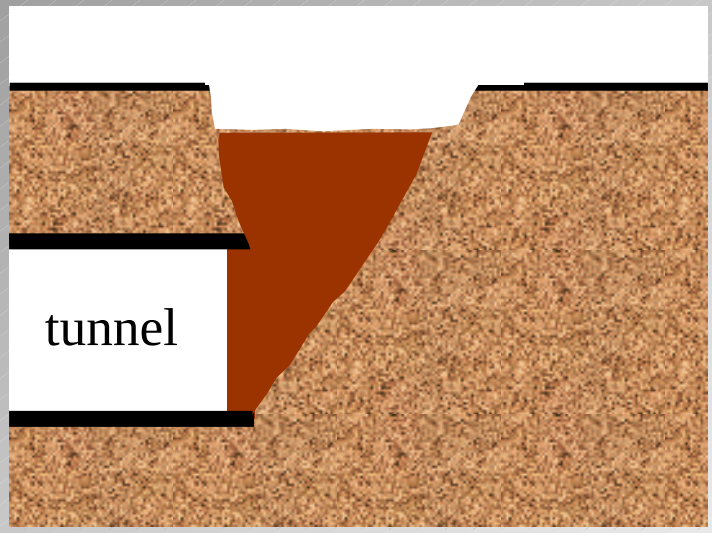

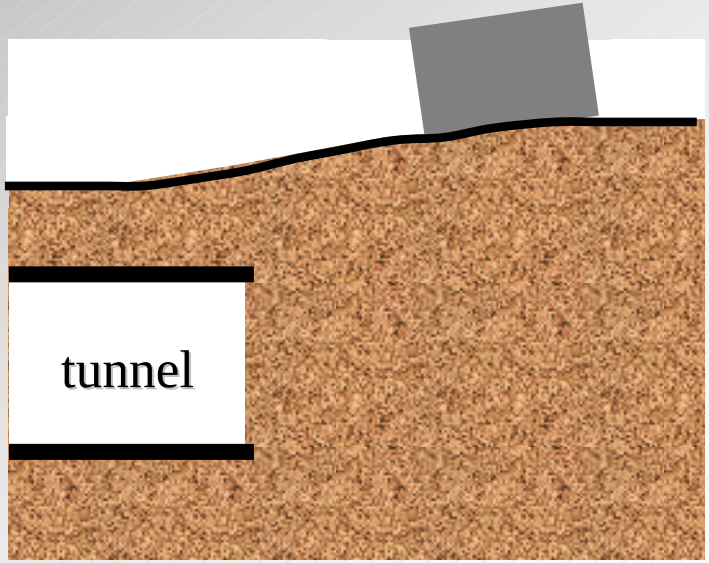

5

TBM face stability control

1

First option for risk reduction

2

The first set of choices which permit the activation of countermeasures to be adopted to face these risk scenarios are :

3

1) the choice of a correct machine for the local urban environment and geology;

4

2) the correct management of the excavation process (control of face counter-pressure, evaluation of the amount of exctracted material to avoid overexcavations, correct and proper filling of tail void, etc.)

5

TBM face stability control

First option for risk reduction

1

2

With specific reference to the correct choice and management of the full face machines it is necessary to control the face stability:

3

a) to correctly evaluate the face pressure to be applied to guarantee the stability and correctly apply with reference of the local environment;

4

b) to properly treat (condition) the ground to permit the face pressure to be applied by the machine;

c) to control the excavation process to avoid over-excavation (monitoring of the ground and of the machine performances)

5

Is these options are not sufficient it is necessary to use a second set of options for risk reduction

TBM face stability control

Most used face support methods

slurry

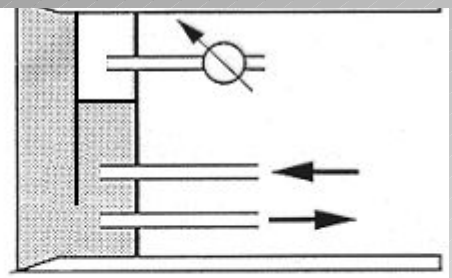

excavated soil

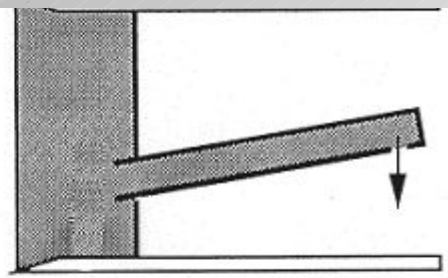

compressed air

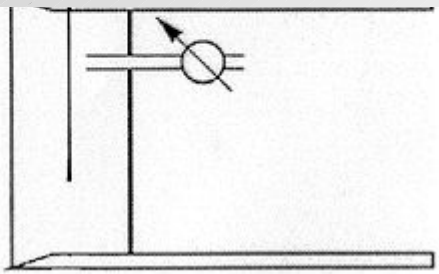

TBM face stability control

EPB machine

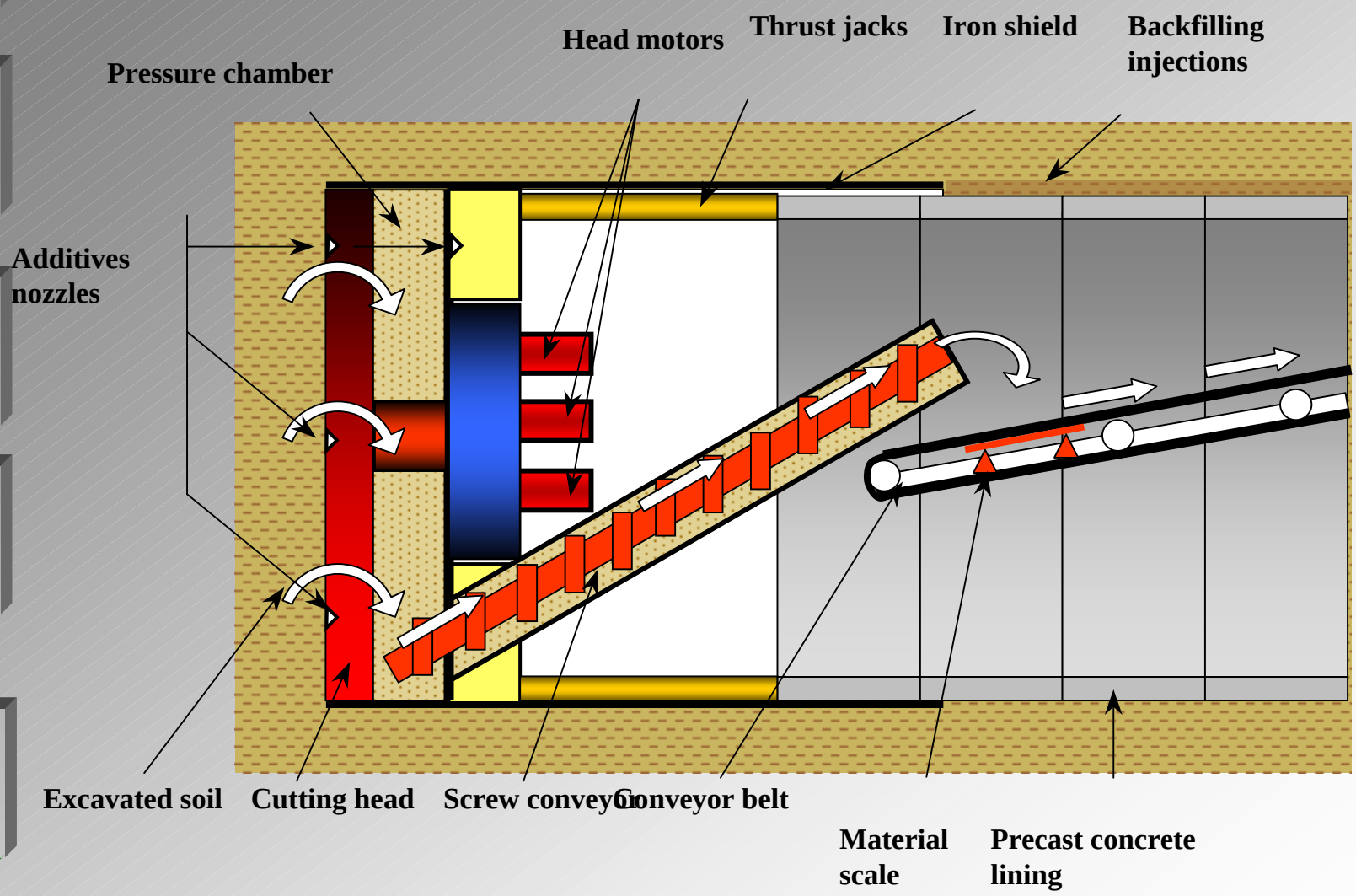

Face stability and EPB soil conditioning

TBM face stability control

EPB machine suggested ranges of applications

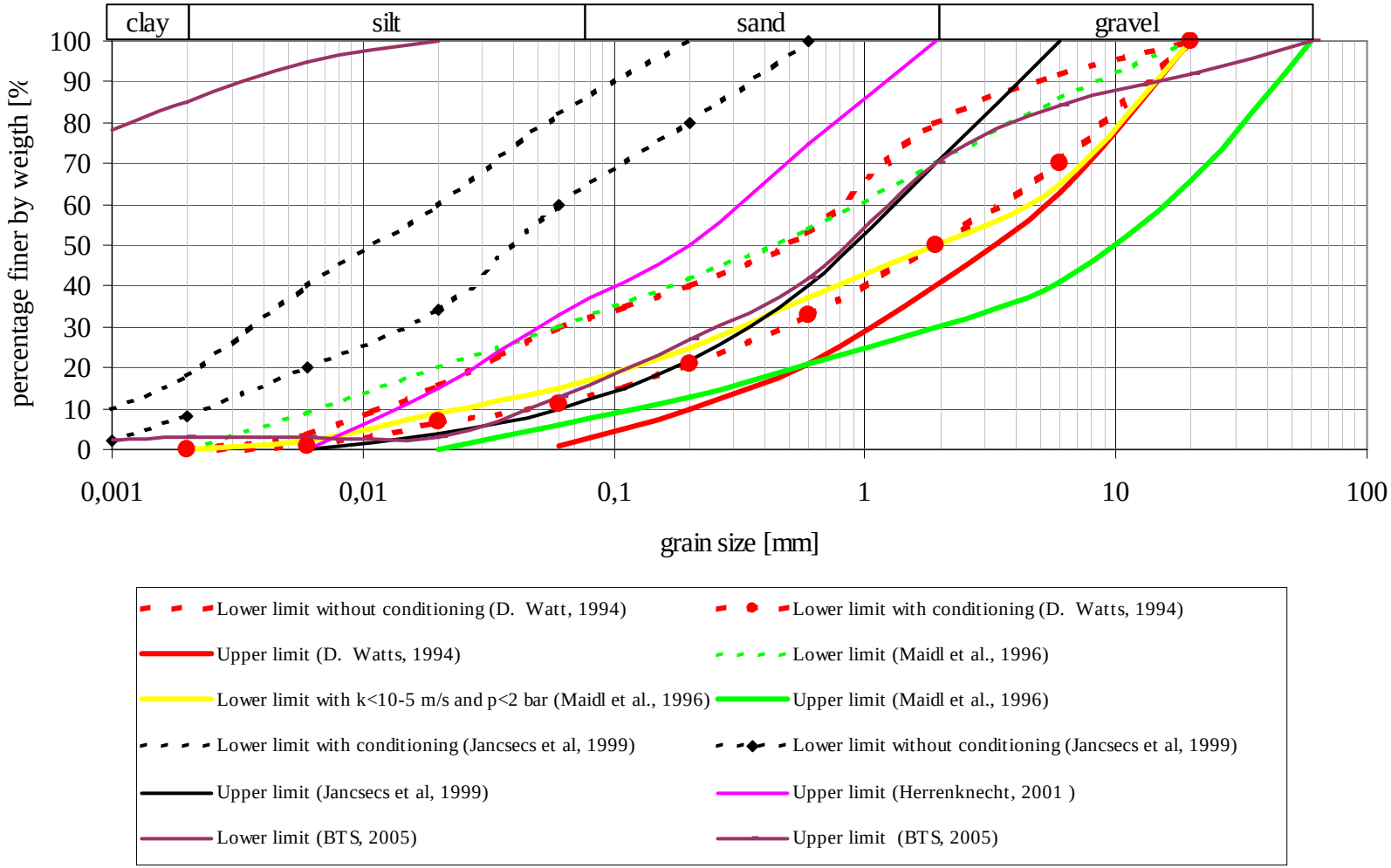

TBM face stability control

EPB machine suggested ranges of applications

1

2

3

4

5

These granulometric curves are only indicative since very often the machines are used outside these ranges to face different ground types by varying the type and the amount of conditioning agents

TBM face stability control

EPB machine example of applications

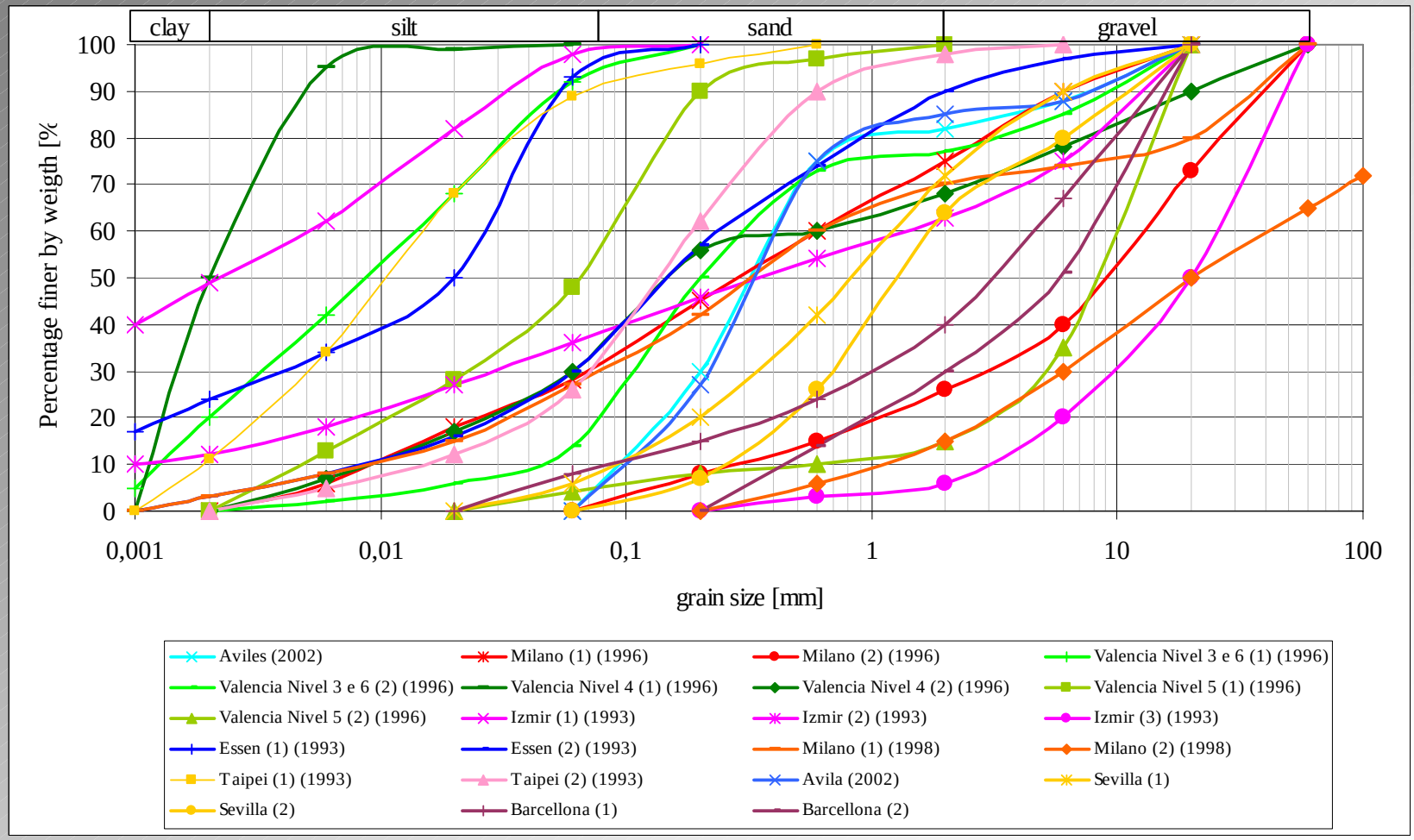

TBM face stability control

Design aspects

1) Definition of the stabilizing pressure to guarantee the stability

2) Definition of the failure mechanism

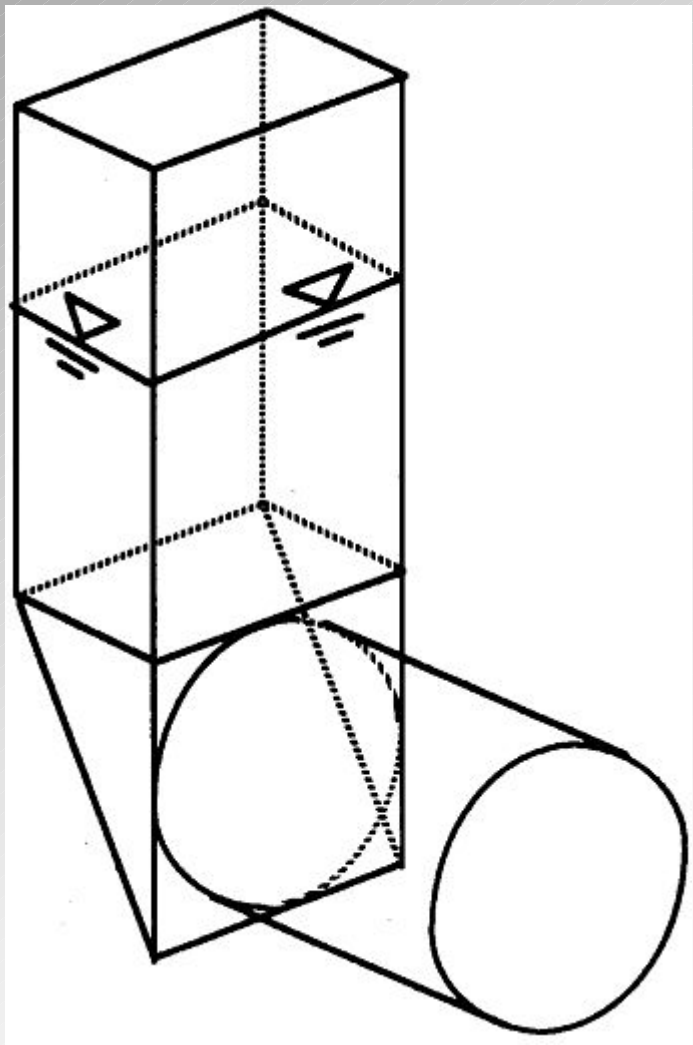

TBM face stability control

1

Design aspects

2

The definition of the appropriate EPB face pressure need to be considered on a project-by-project basis taking into proper account the soil properties, the groundwater content and the TBM design.

3

Groundwater pressure: in some types of rock such as weak or broken rock the principal reason for using a closed-face machine is to control groundwater.

4

The operating pressure should be a small margin, perhaps 10%, above the existing hydrostatic pressure.

In water bearing granular material it is necessary to apply operating pressures to resist both hydrostatic and soil pressure.

5

In both cases it is necessary to ensure that no risk of ground loss from the crown

(BTS, 2005)

TBM face stability control

1

Design aspects

2

Unstable ground : In non-water bearing granual material where there is no water pressure to balance and where the soil pressure may be small it is difficult to determine the operating pressure.

3

It is necessary to operate the machine at a pressure that ensures the bulk chamber remains full at all the times to guard against loss of ground from the tunnel crown.

4

In soft clays and silts that can flow it may be appropriate to use a pressure that approximates to full overburden pressure

(BTS, 2005)

5

TBM face stability control

EPB Soil conditioning

1

2

Modification or conditioning of the excavated material is a process for both slurry and EPB tunnelling system

3

For EPB shields conditioning agents, usually foam or foam/polymer solution are injected under pressure into the spoil as it is excavated to assist the tunnelling process in two ways:

4

when mixed with the soil the conditioning fluid reduces the permeability and the internal friction of the material which flow trough the bulk chamber and the screw conveyor for discharge into the muck-haulage skips at the atmospheric pressure;

5

the reduction of permeability of the material enables the creation of the plug in the screw conveyor to form and ensure that earth pressure balance support of the tunnel face is maintained.

TBM face stability control

Monitoring of buildings and of the surface

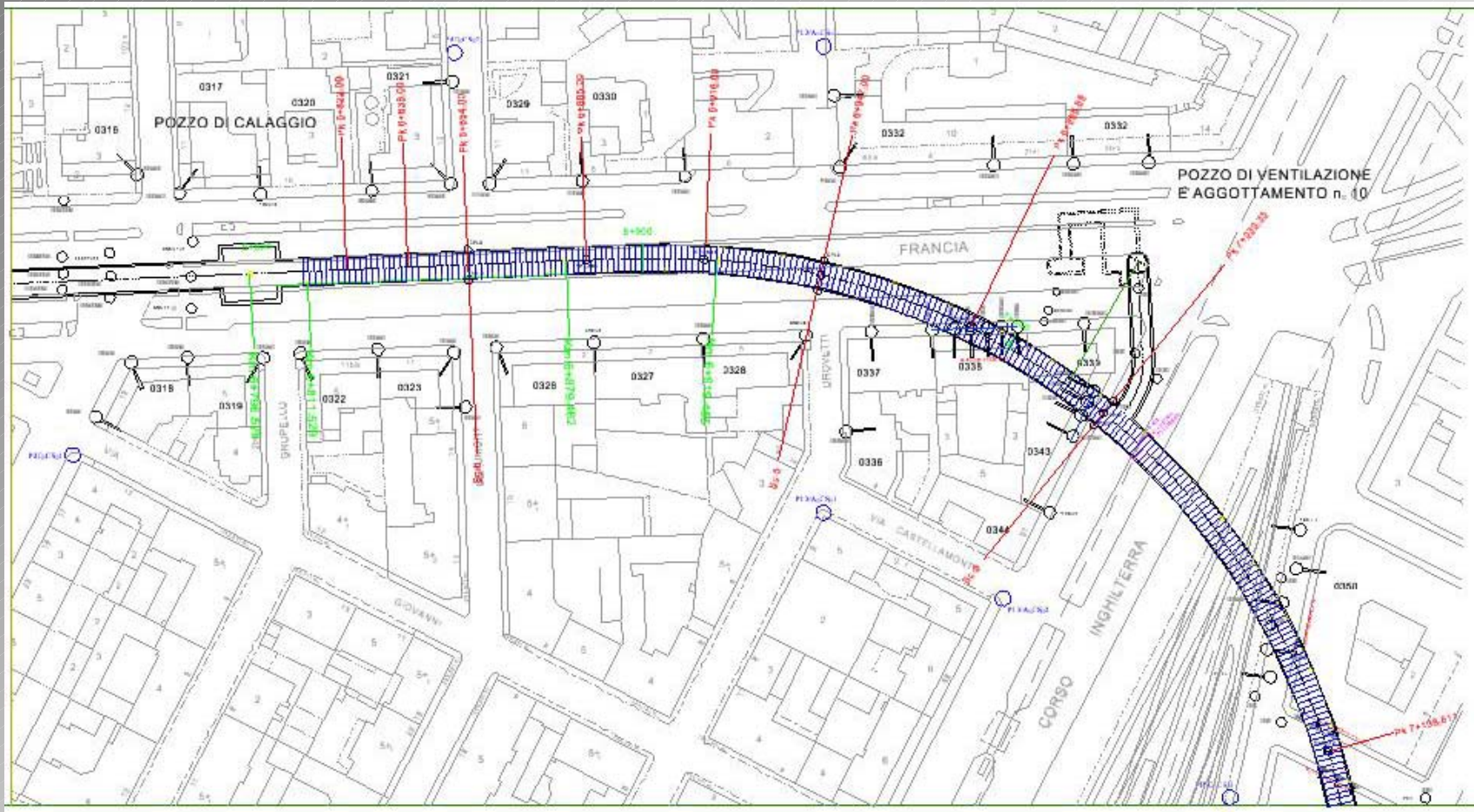

Torino metro – courtesy GTT-Torino

TBM face stability control

Monitoring of machine performance

To monitor an EPB machine the following parameter are used:

-the pressure inside the bulk chamber and along the screw-drive;

-the weigh of extracted material;

-the amount of material injected in the tail void and the injection pressure.

Many pressure sensors are applied inside the bulk chamber to measure and keep under control the pressure of the spoil.

This control is a key parameter for the correct management of the machine and for the control of tunnel face stability

Guglielmetti et al., 2002

TBM face stability control

Monitoring of machine performance

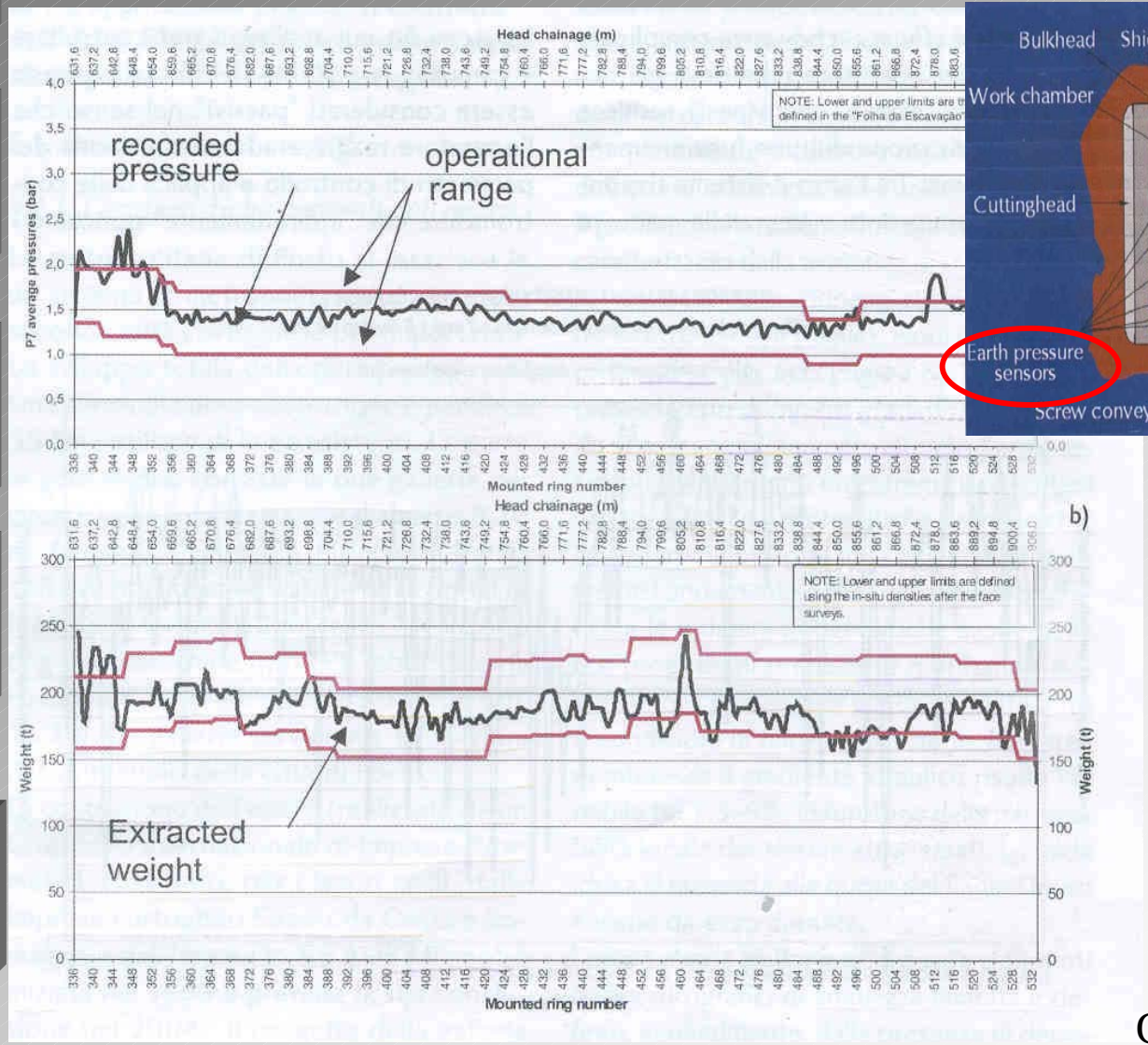

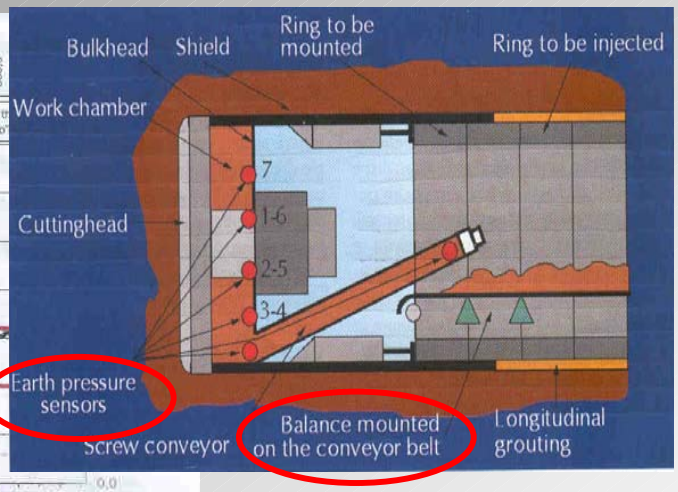

Average value of earth pressure at the face and of the weigh of the extracted material

Guglielmetti et al., 2002

TBM face stability control

1

2

3

4

5

Secondary option for risk reduction

a) Constructional measures

– Ground improvement from the surface

–Ground improvement from underground works

– Prepared grouted blocks for stopping the machine

– Preventive structures

b) Additional measures

- evacuation of buildings

- closure of roads

TBM face stability control

Ground improvement

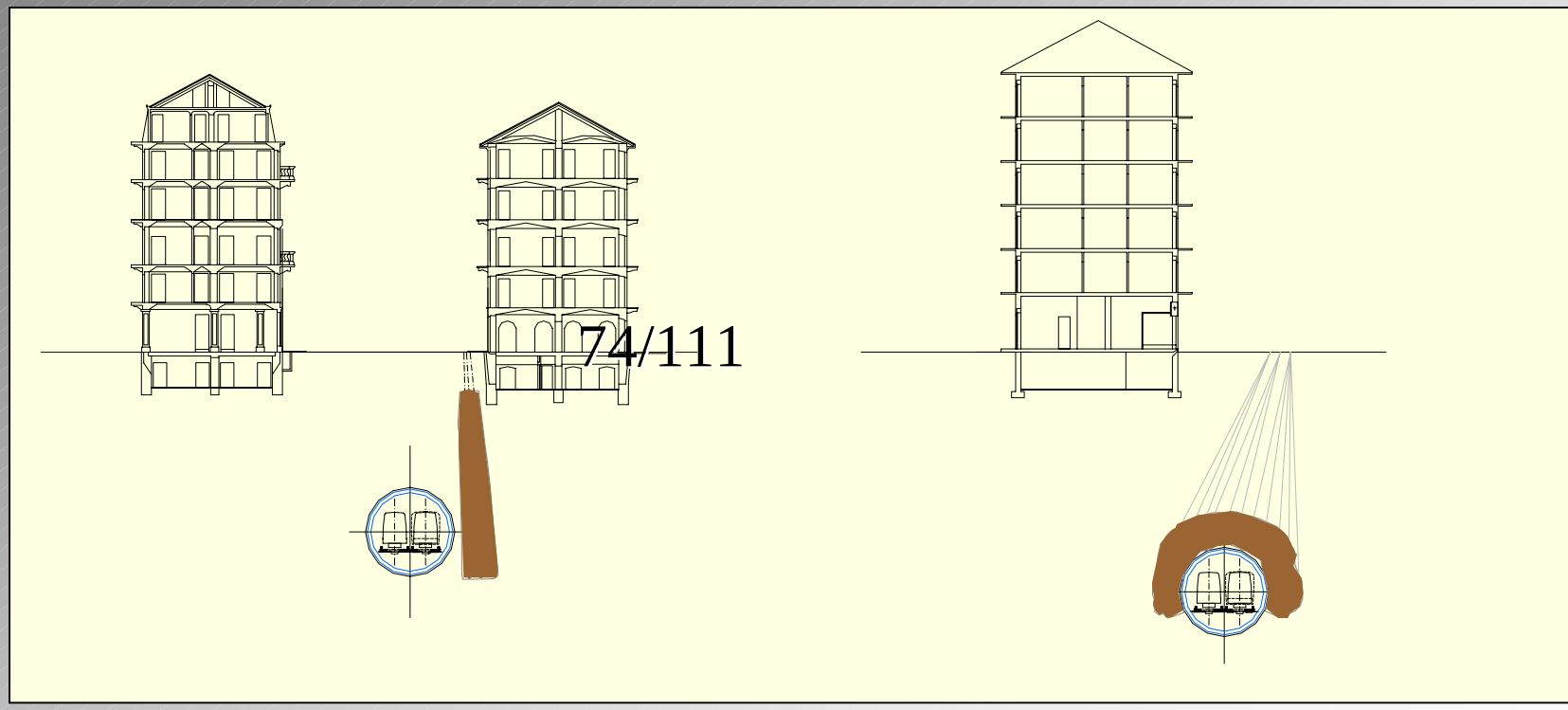

Torino Metro

TBM face stability control

Ground improvement

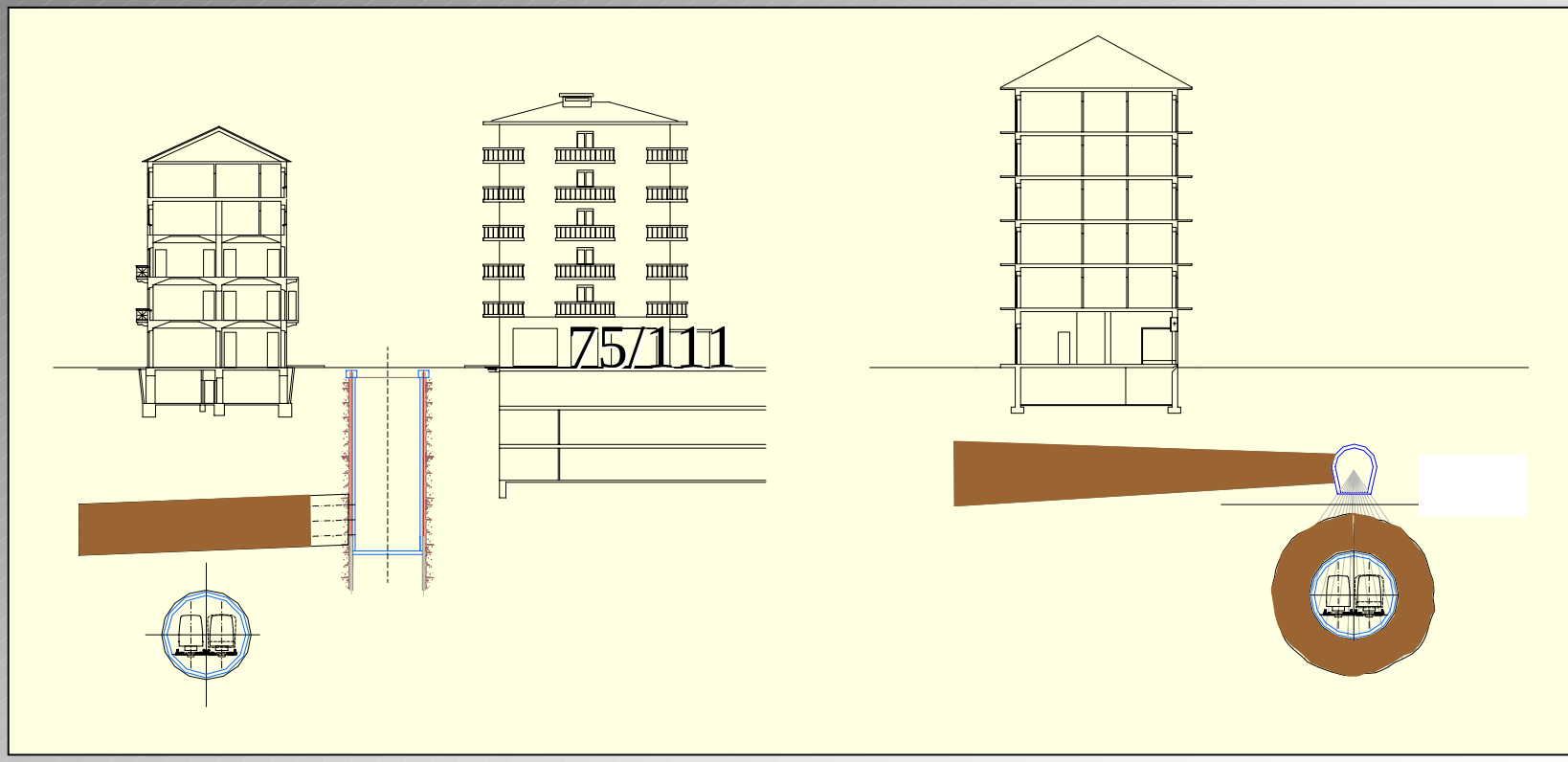

Torino Metro

TBM face stability control

Ground improvement

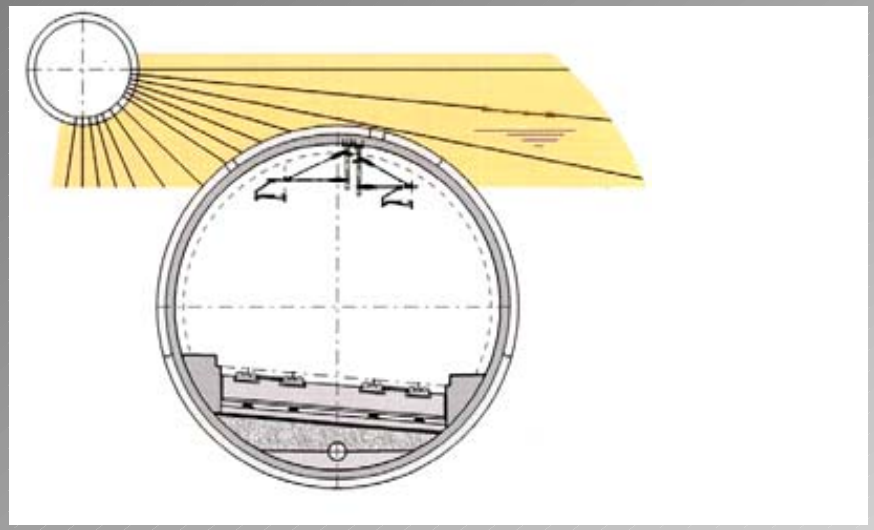

Zimmerberg Tunnel

Zurich; Kovari, 2004

TBM face stability control

Ground improvement around the tunnel to be excavated

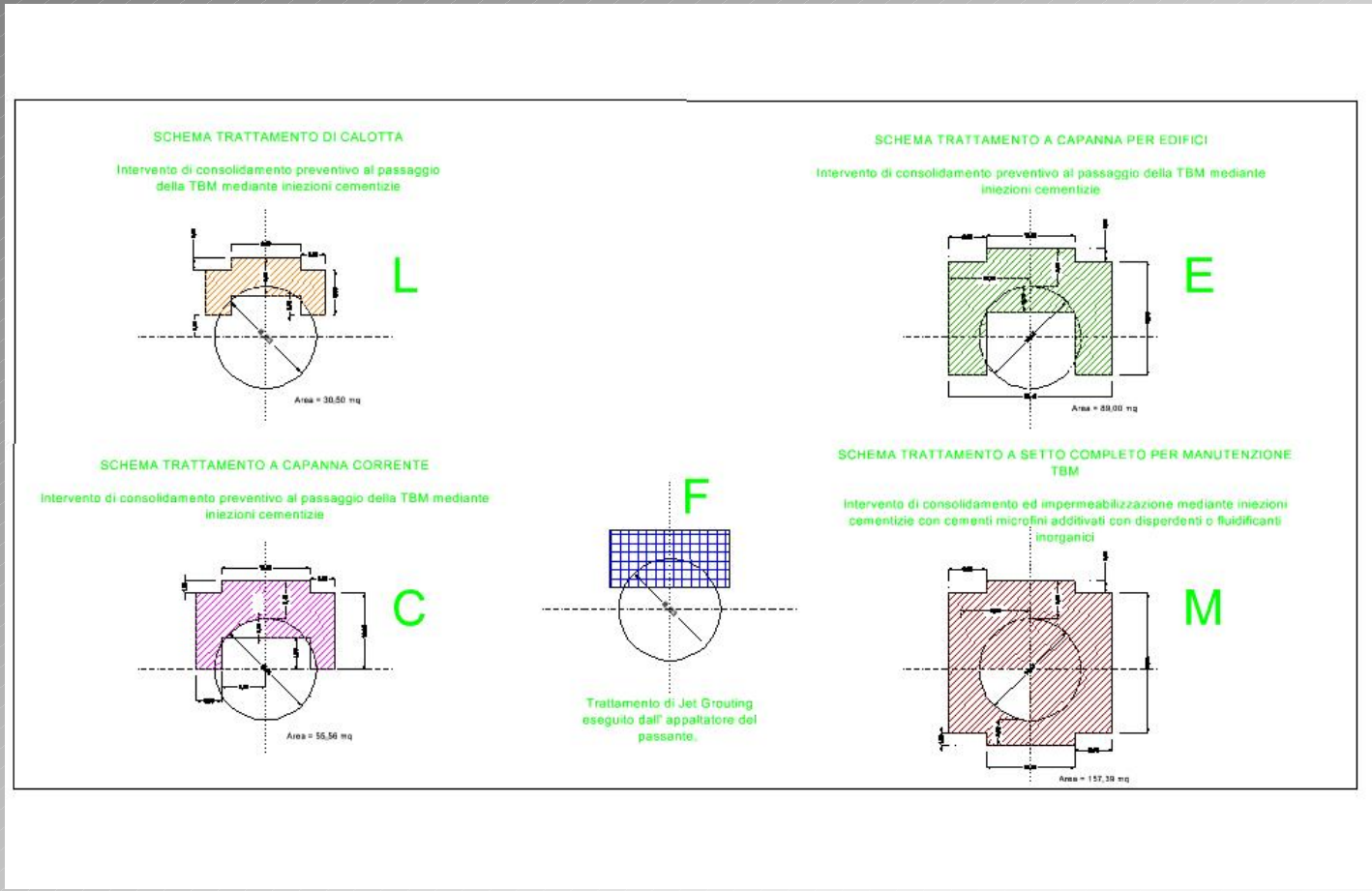

Torino metro

TBM face stability control

Preventive structures

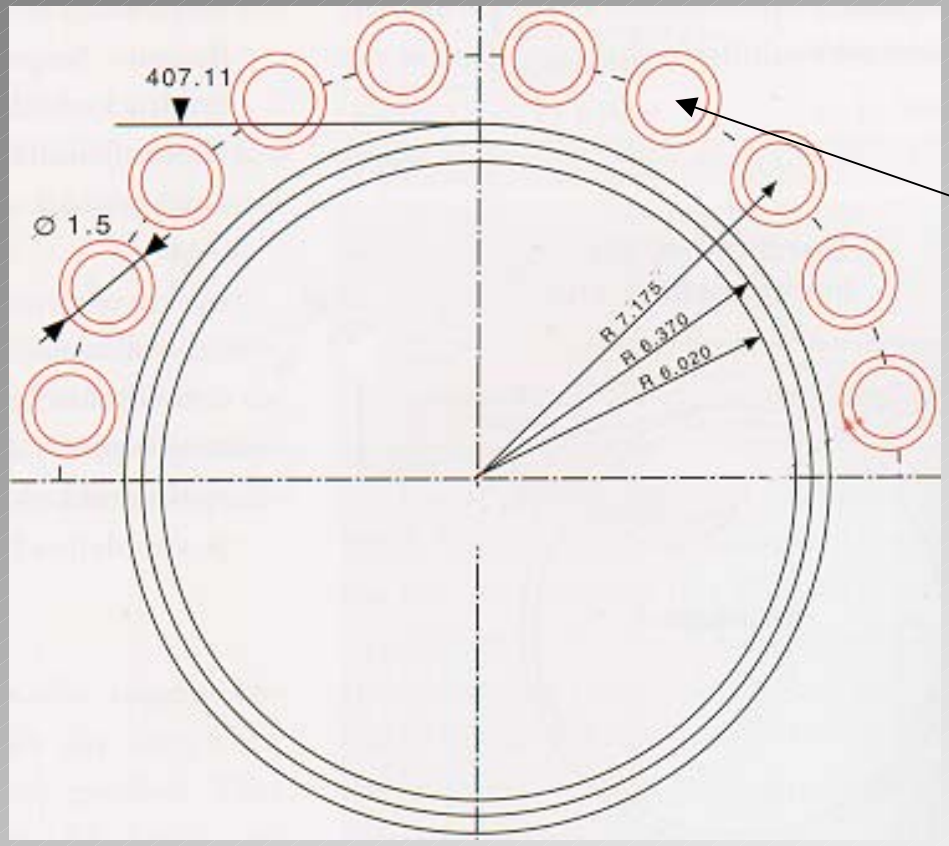

microtunnelling

Zimmerberg Tunnel

Zurich; Kovari, 2004

TBM face stability control

Prepared grouted blocks for stopping of machines

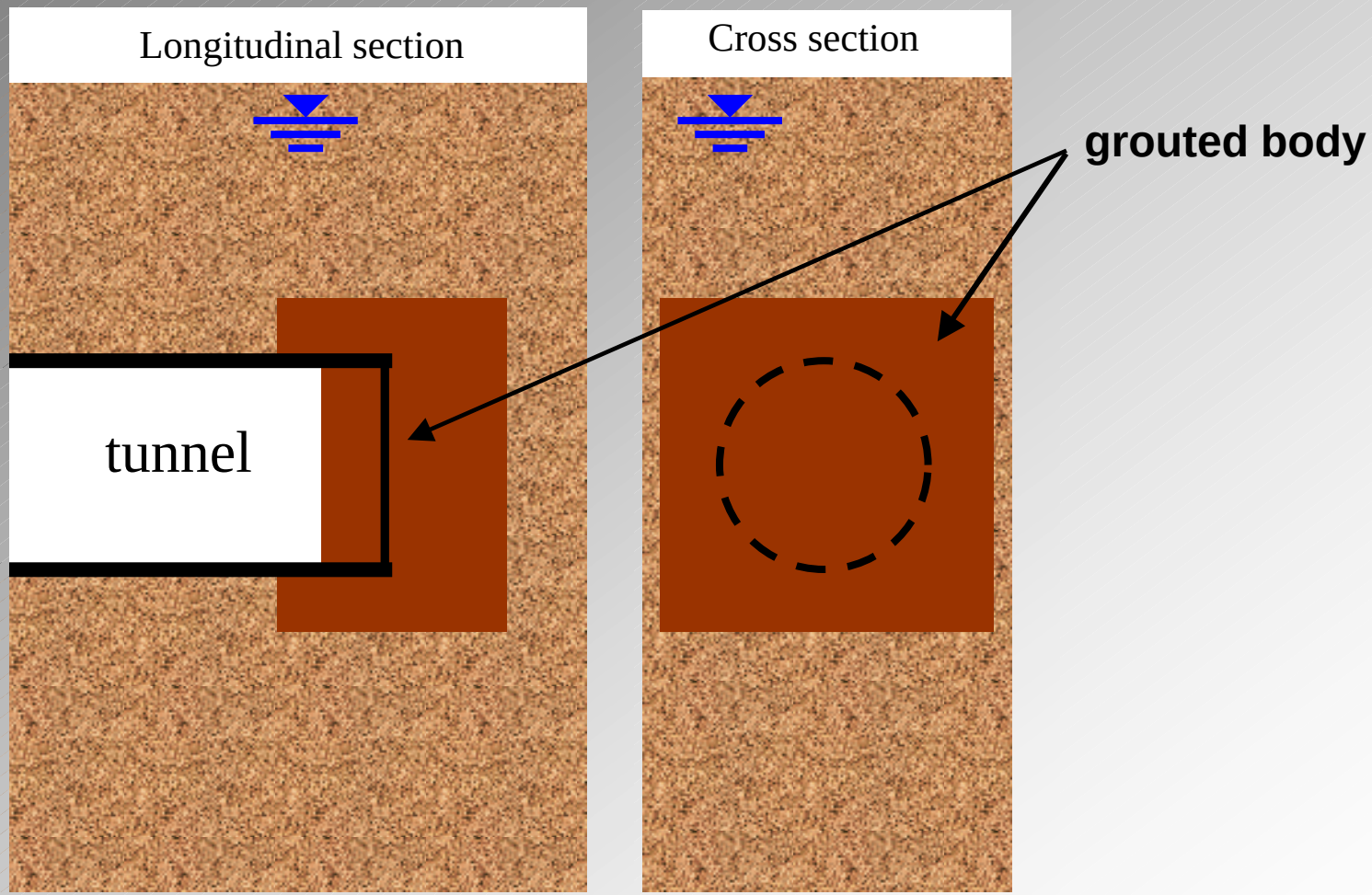

1

SOIL CONDITIONING: WHY

2

In order to fulfill all the requirements for a successful EPB technology application, as well as to extend the applicability of such technology over a wider range of soils, it becomes necessary to inject some additives that “transform” the soil into a material that shows the required features:

3

-Good plasticity

4

-Low permeability

-Pulpy consistency

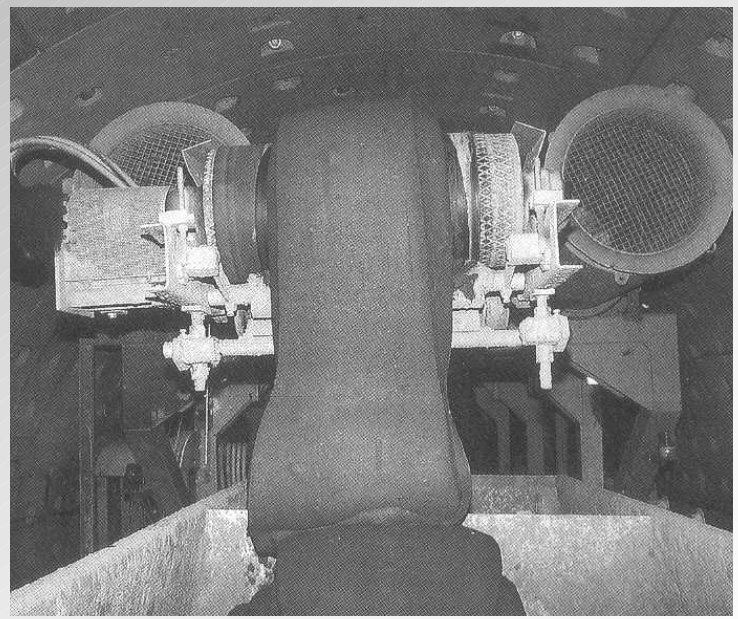

5

For EPB system spoil conditioning is an essential part of the tunnelling process

EPB soil conditioning

1

Main goals to be obtained with soil conditioning

2

•Reduction of the wear for all mechanical parts of the machine in contact with the soil

•Better uniformity of the pressure distribution in the bulk chamber and consequent improvement of the face stability, with better control of the subsidences

3

•Control of the flow of the excavated material through the cutter head

•Reduction of the required power for the cutter head due to the reduction of friction

4

•Reduction of the friction forces in the bulk chamber with consequent reduction of the generated heat;

•Reduction of the permeability with consequent better control of water inflow;

5

•Smoother flow of material along the screw conveyor and creation of the plug in the screw;

•Easier spoil handling

1

SOIL CONDITIONING: WHERE

2

The additives are injected in several points of the machine:

3

-ahead the cutting head

4

-in the pressure chamber

-along the screw conveyor

5

1

SOIL CONDITIONING: WHAT

2

The most used additives for soil conditioning belongs to following families:

3

- Foam (surfactants and are delivered to site as concentrates. These are mixed with water and compressed air in a specific ratio to create a foam).

-Polymers (to improve the foam stability and the consistency of the spoil)

4

-Anti-amalgams in ground with high clay content to avoid amalgamation and improve their characteristics

-Abrasion-preventers

-Bentonite

5

-Filler

Water can also be injected in order to plasticize the finer part of the soil (clay, silt)

EPB soil conditioning

1

2

Average composition for a normally used foam:

3

Foaming agent: 0.5-1%

Water: 5-10%

Air: 90-95%

4

Polymer (eventual): <0.1%

5

Foaming agent can have inside a small amount of polymer to stabilize the foam bubbles

EPB soil conditioning

1

2

3

4

5

Foam properties assessment

t_{50}
density
FER

Foam expansion ratio (FER) : to measure the ratio of concentrate to expand foam. Should be carried out using foam generator that it is intended to used on the TBM

Foam density: to measure the density of various foams in their expanded state

Foam stability (half time): to measure the durability of the foam at atmospheric pressure (different foams can change their properties in 3 min hp to 1 hour !)

SOIL CONDITIONING: HOW

By now, no procedure nor protocol or guidelines have been developed for the conditioned soil features assessment: "At present, soil conditioning in soft ground tunnel boring machines remains very much a "black art", determined largely by experience or trial and error"

as reported by EFNARC, "Specification and Guidelines for the use of specialist products for Soft Ground Tunnelling, November 2001and the latest EFNARC specifications (dated April 2005) the issue "Test methods for conditioned soil" is not largely discussed.

Laboratory tests

FOAM Design parameters

normally used ranges

$$FER = \frac{V_{foam}}{V_{generation\_liquid}}$$

(8 - 20)

FER = Foam Expansion Ratio

(20 – 80 %)

$$FIR = \frac{V_{foam}}{V_{excavated\_soil}}$$

FIR = Foam Injection Ratio

Laboratory tests

	Foam types				Polymer additives
Soil	A	B	C	FIR	
Clay	↕			30-80	Anti clogging polymer
Sandy lay – silt	↕	↕		40-60	Anti clogging polymer
Sand – layey silt		↕		20-40	Polymer for consistency control
Sand		↕	↕	30-40	Polymer for cohesiveness and consistency control
Clayey ravels			↕	25-50	Polymer for cohesiveness and consistency control
Sandy ravels			↕	30-60	Polymer for cohesiveness and consistency control

Product types for EPBM relative to different soils (FIR values are indicative only)

EFNARC (2005)

Laboratory tests

1

2

Test on the conditioned soil

Foam penetration test

3

Slump tests

4

Mixing tests

Permeability test

5

Screw drive extraction tests

Laboratory tests

1

2

Test on the conditioned soil

3

Foam penetration test

The purpose of this test is to determine the depth, beyond the cutterhead to which the foam can be injected.

4

During the test the foam is made to penetrate under pressure in the sample contained in a cylinder to which is also applied a water counter-pressure. The ability of the foam to penetrate inside the ground is then measured

5

Laboratory tests

1

Slump test on conditioned soil

2

The purpose of this test is to determine a global and plastic behaviour of the treated ground.

3

The conventional slump cone standard as for fresh concrete is used

4

Values of cone fall between 10 and 15 are usually suggested as optimal in technical literature.

Vinai et al. (2007) proposed an assessment chart for interpreation of choesion less soils

5

Laboratory tests

Slump test: soil assessment

The assessment of the quality of the additivation has been carried out both measuring the cone fall height and observing the final consistency of the mix:

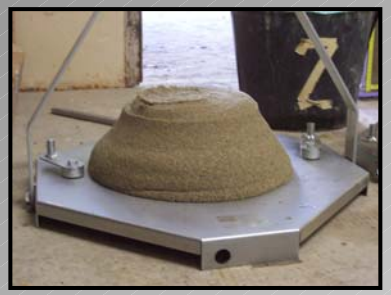

Good

Fair

Too dry

Too wet

Laboratory tests

Slump test: soil assessment

Relationship between water content and FIR for an uniform sand

Peila et al. 2007

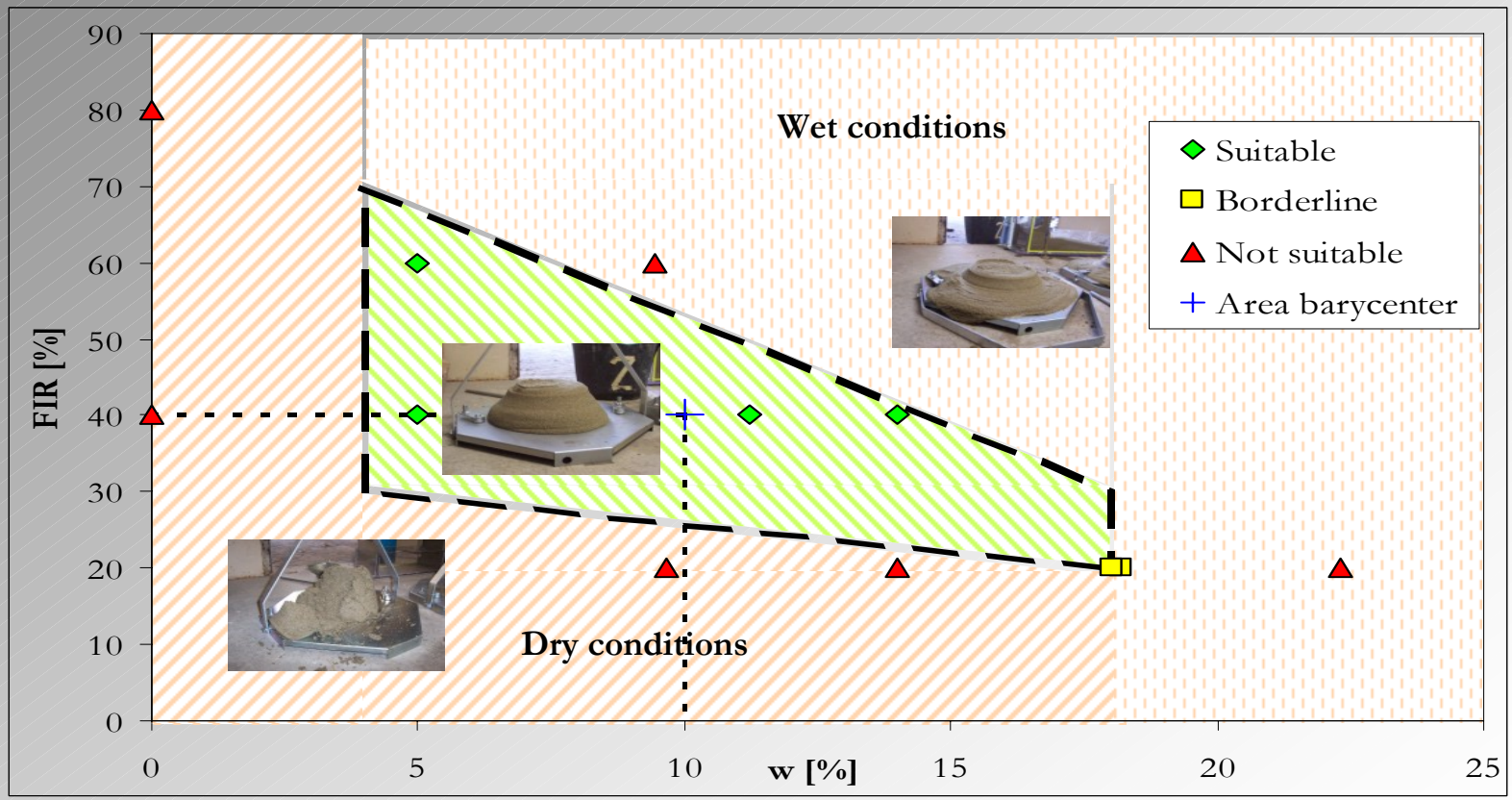

Laboratory tests

Foam mix stability

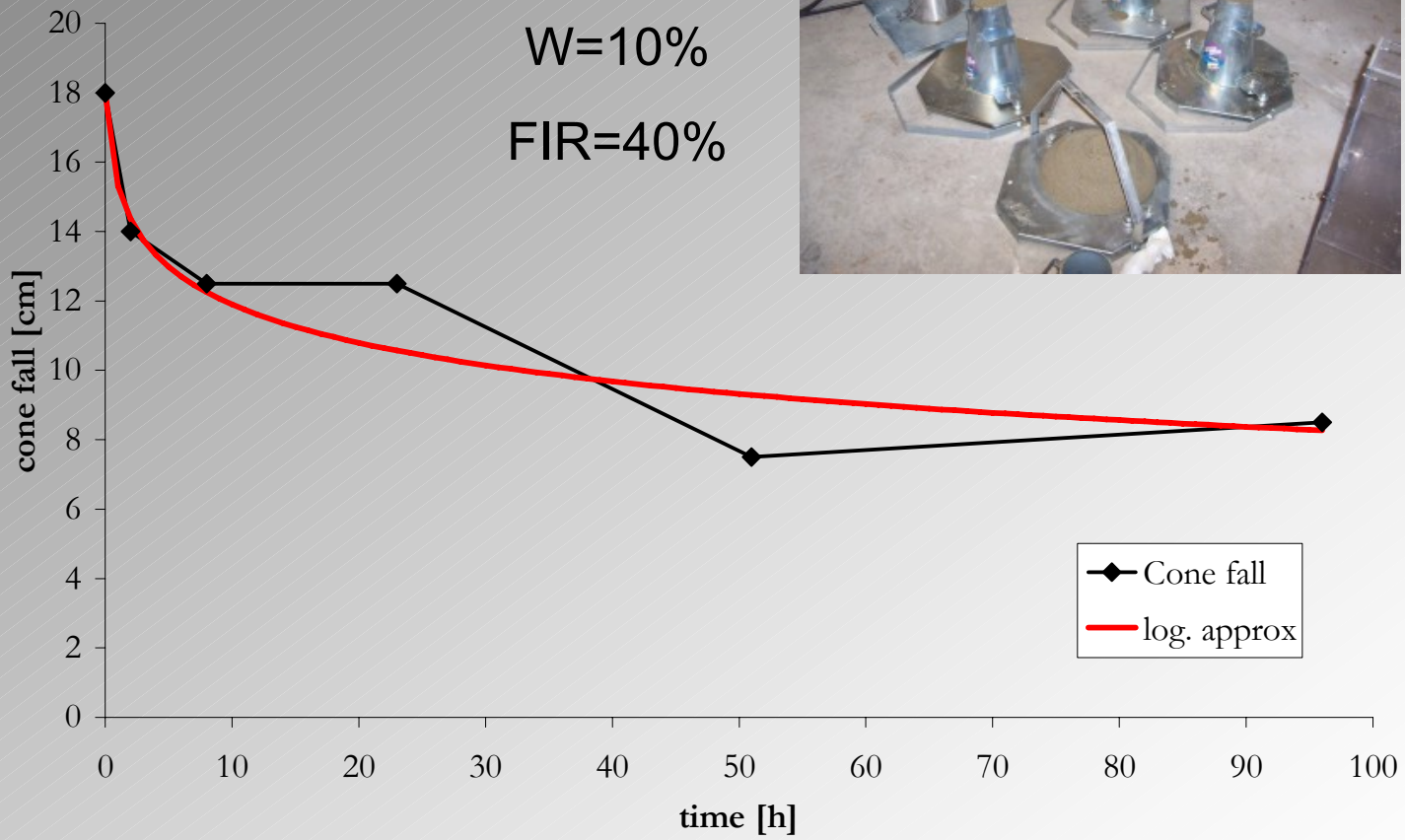

Vinai, 2006

Laboratory tests

Foam effect on drainage time

$$td_{50} = \frac{t(250ml)_{cond}}{t(250ml)_{nat}}$$

Laboratory tests

1

2

3

4

5

- The use of simple tests as slump test for the definition of the quality of the soil treatment is necessary both for a matter of simple and quick execution as well as the possibility of check the results on job-site;
- The global understanding of the behaviour of the conditioned soil calls for a deeper investigation based on big size tests analysing precise aspects of the EPB operations;
- Geometry and dimension of an experimental apparatus should be as similar as possible to reality, as well as monitored parameters should be the same recorded during real excavation;
- The whole chain of pressure transmission, from pressure chamber to the discharging point of the screw conveyor should be monitored.

Laboratory tests

Component	Dimension: mm
Conveyor casing length	1050
Conveyor casing internal diameter	108
Unrestricted discharge outlet diameter	85
Restricted discharge outlet diameter	50
Screw length	1200
Screw flight diameter	102
Screw shaft diameter	43
Screw pitch	80/130

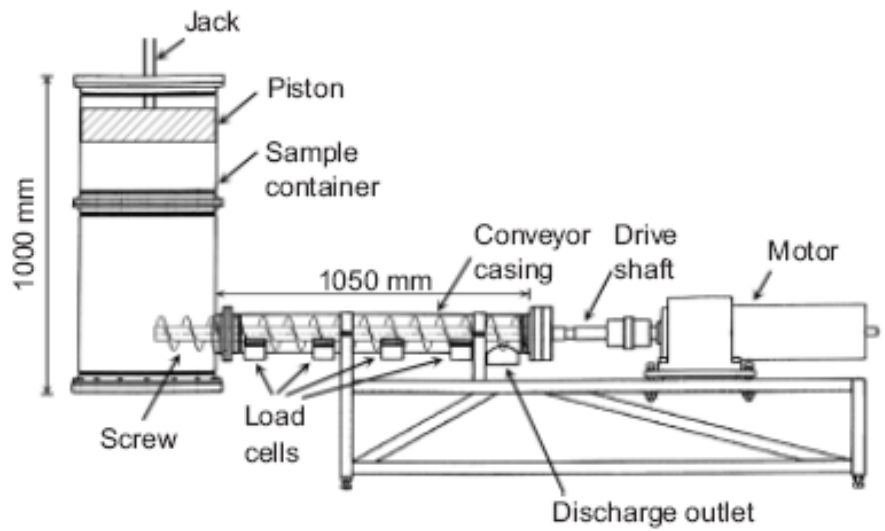

Laboratory screw conveyor devices

Device used at Cambridge University - Merritt and Mair, 2006

Laboratory tests

Lab screw conveyor devices

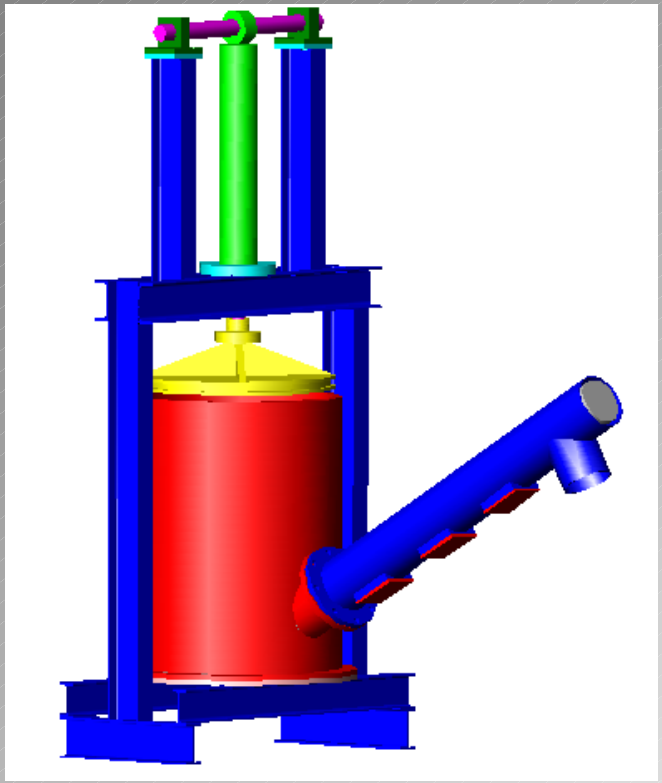

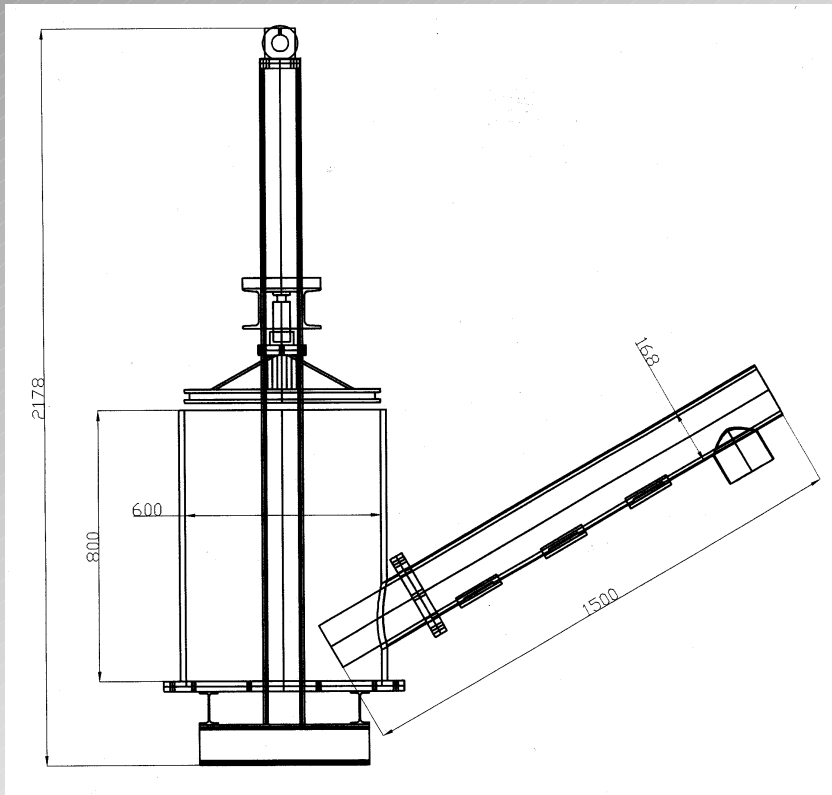

Device used at Politecnico di Torino - Vinai et al., 2006

Laboratory tests

Lab screw conveyor devices

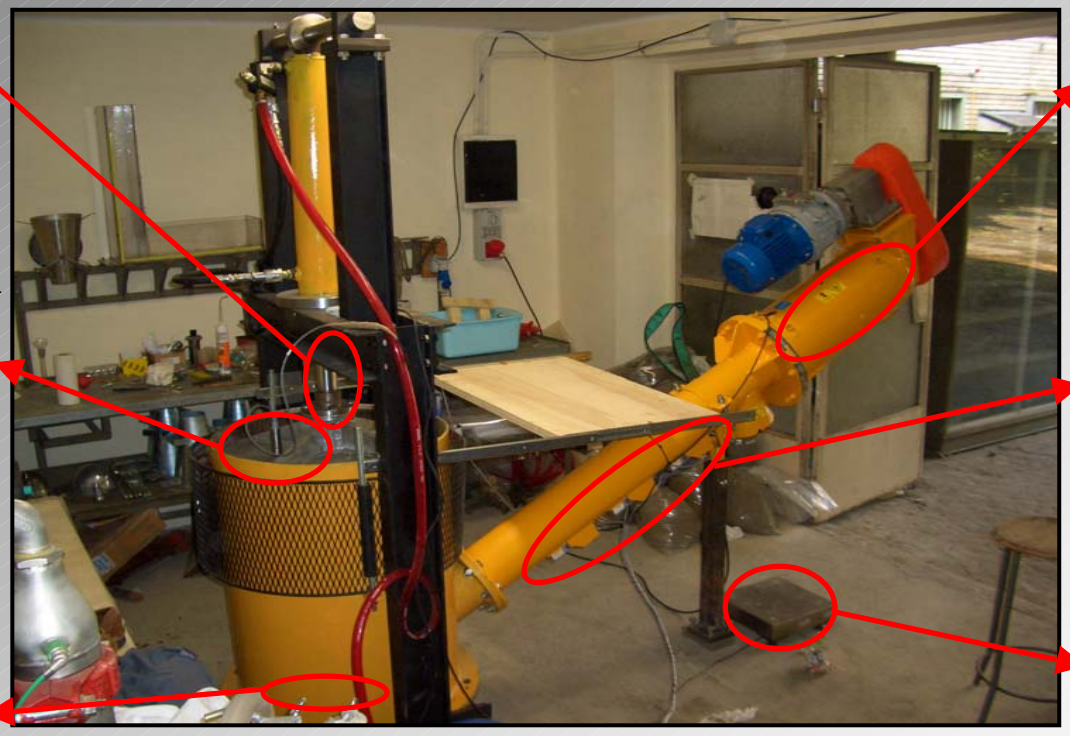

Tank height: 800mm
Screw lenght: 1500mm

Tank diameter: 600mm
Screw diameter: 168mm

Device used at Politecnico di Torino - Vinai et al., 2006

Laboratory tests

Lab screw conveyor devices

Better transmission of the pressures from the tank to the screw conveyor and along the screw conveyor itself.

Saturated sand

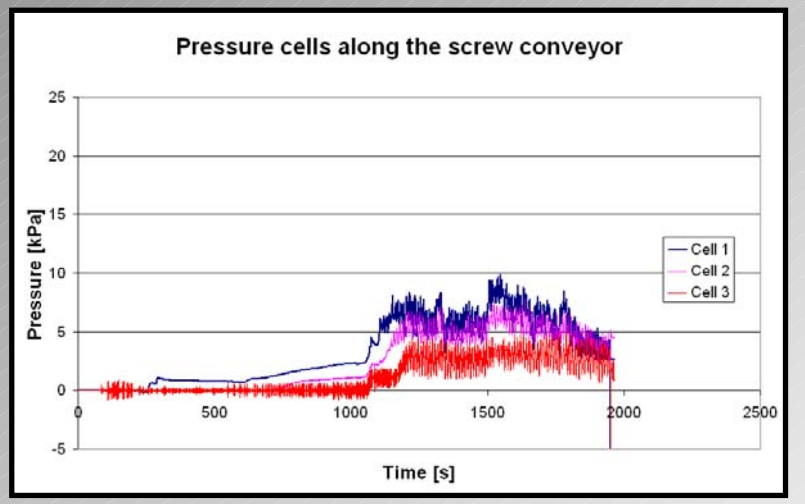

Conditioned sand

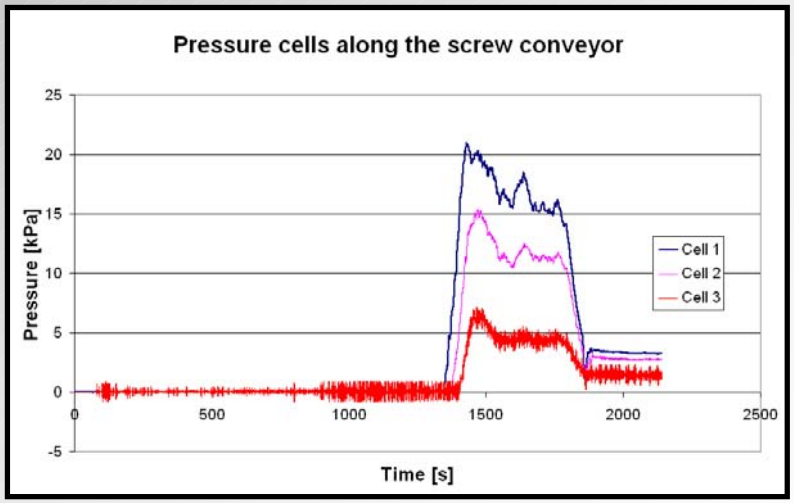

Vinai et al., 2006

Laboratory tests

Lab screw conveyor devices

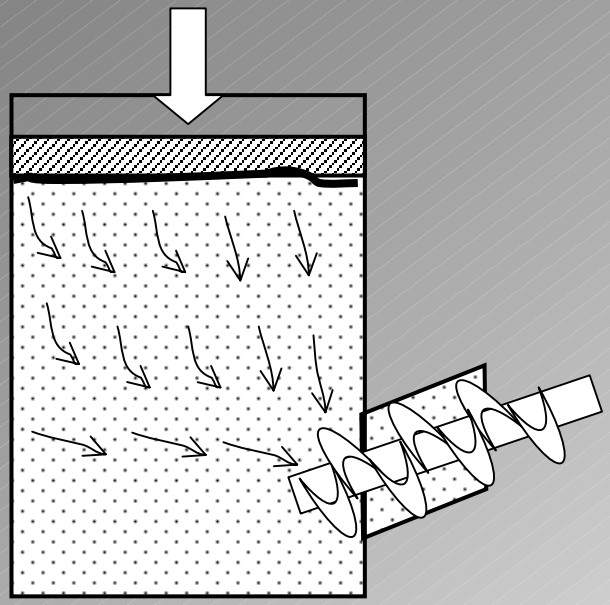

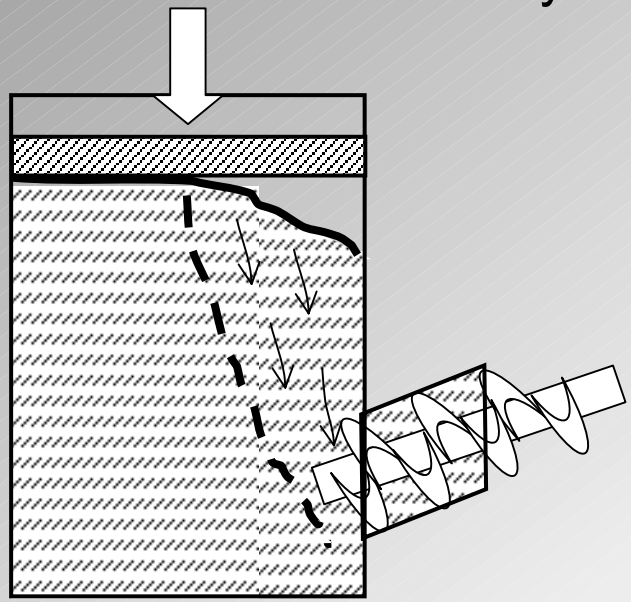

Conditioned soil

Wet sand

Laboratory tests

screw torque measured values

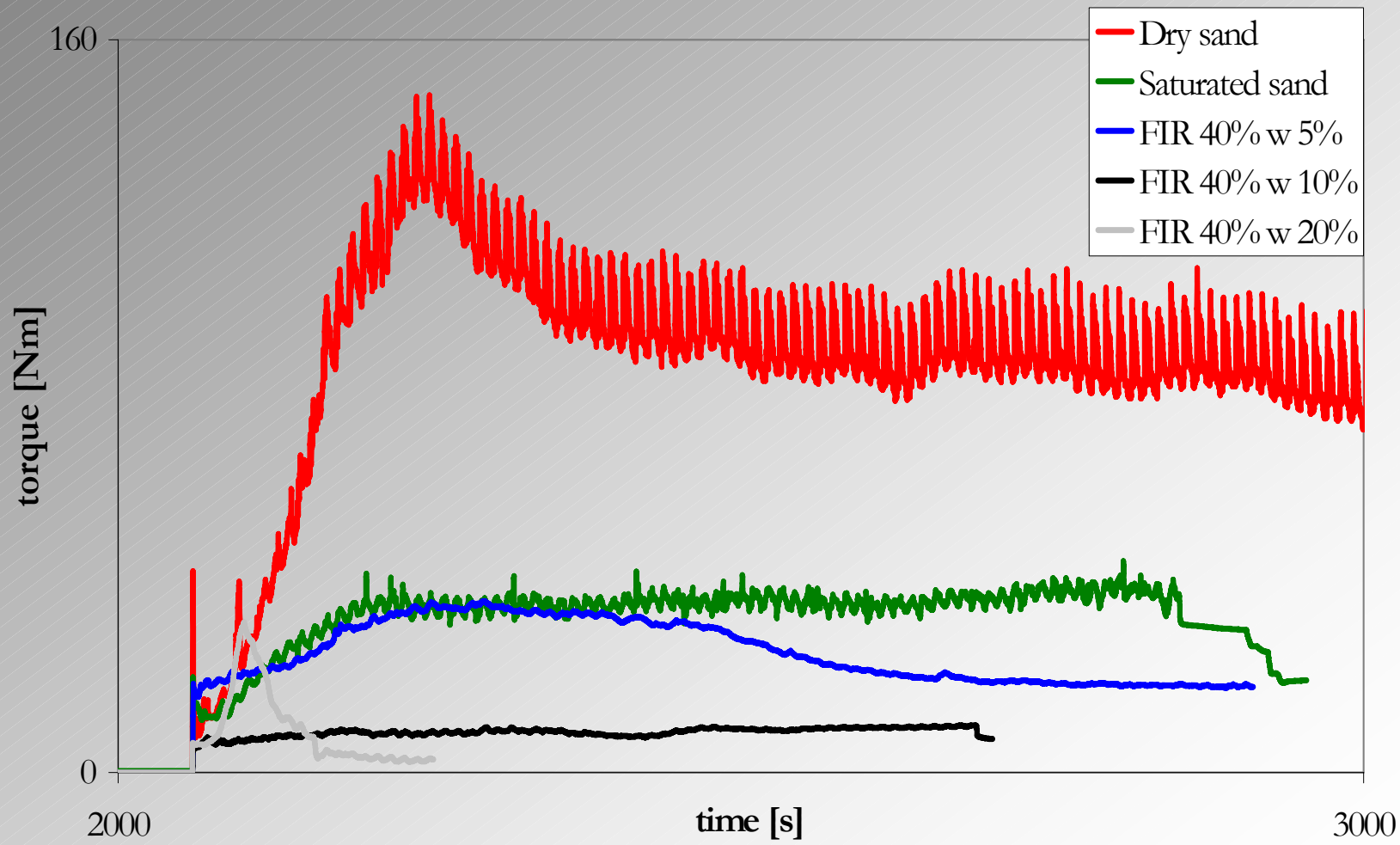

Laboratory tests

FIR=25%
w=10%
FER=16

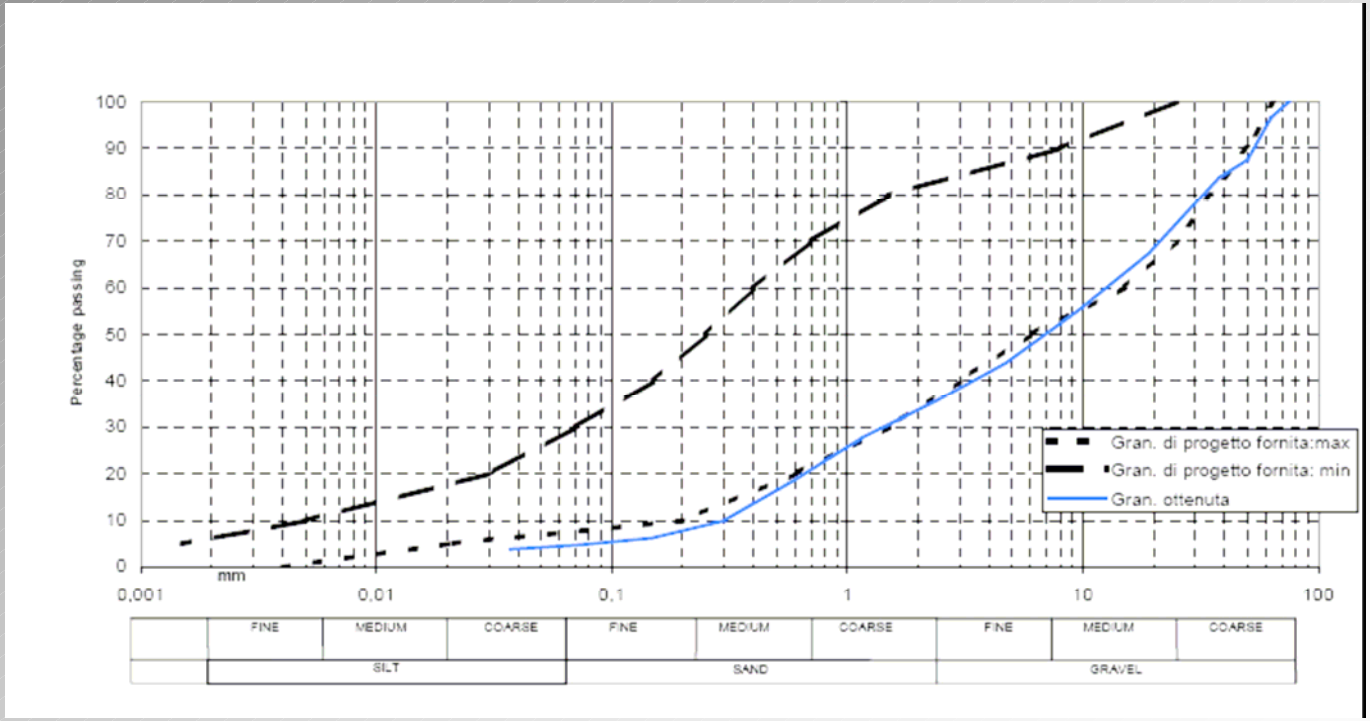

Natural soil

Laboratory tests

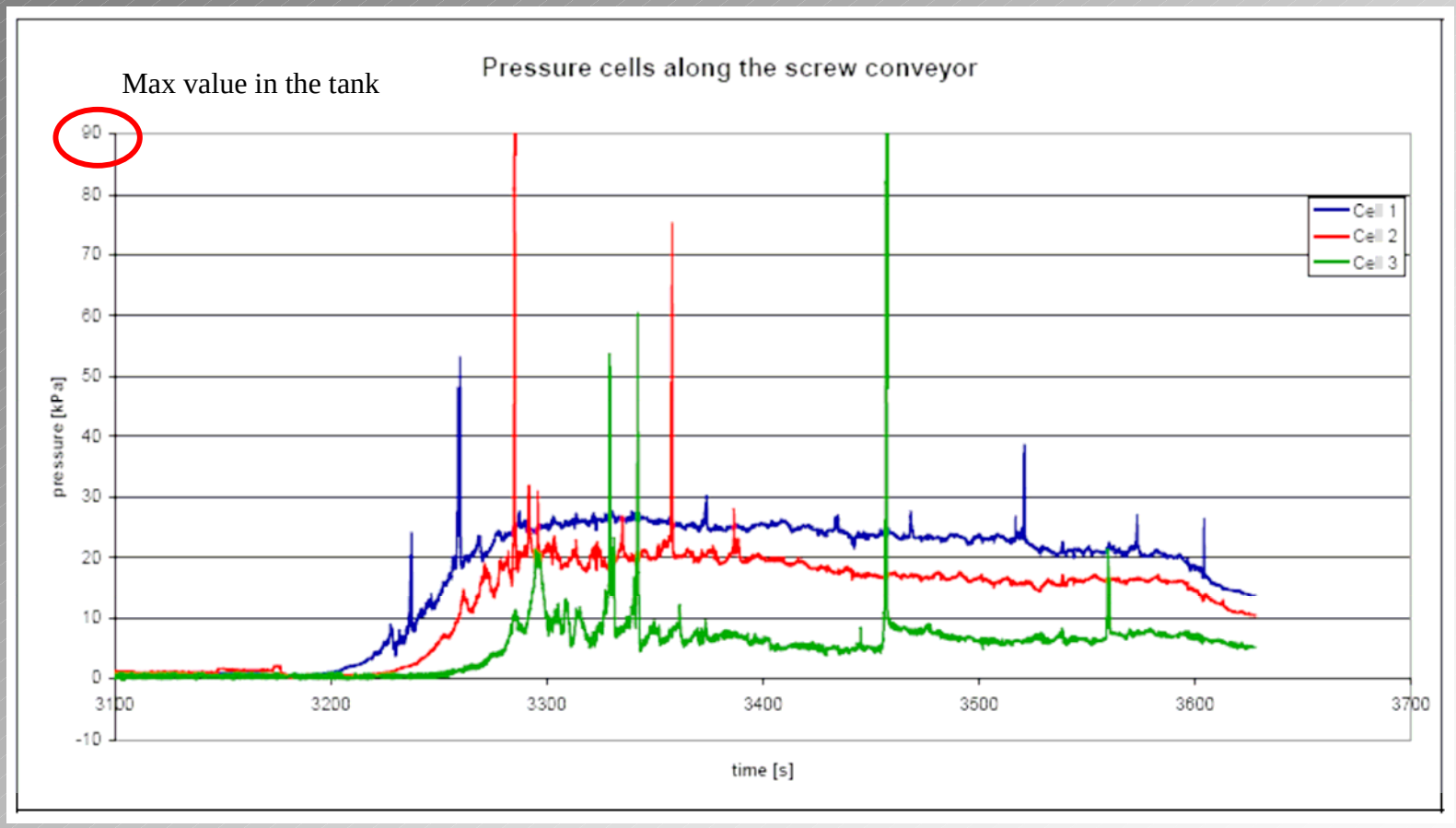

Laboratory tests

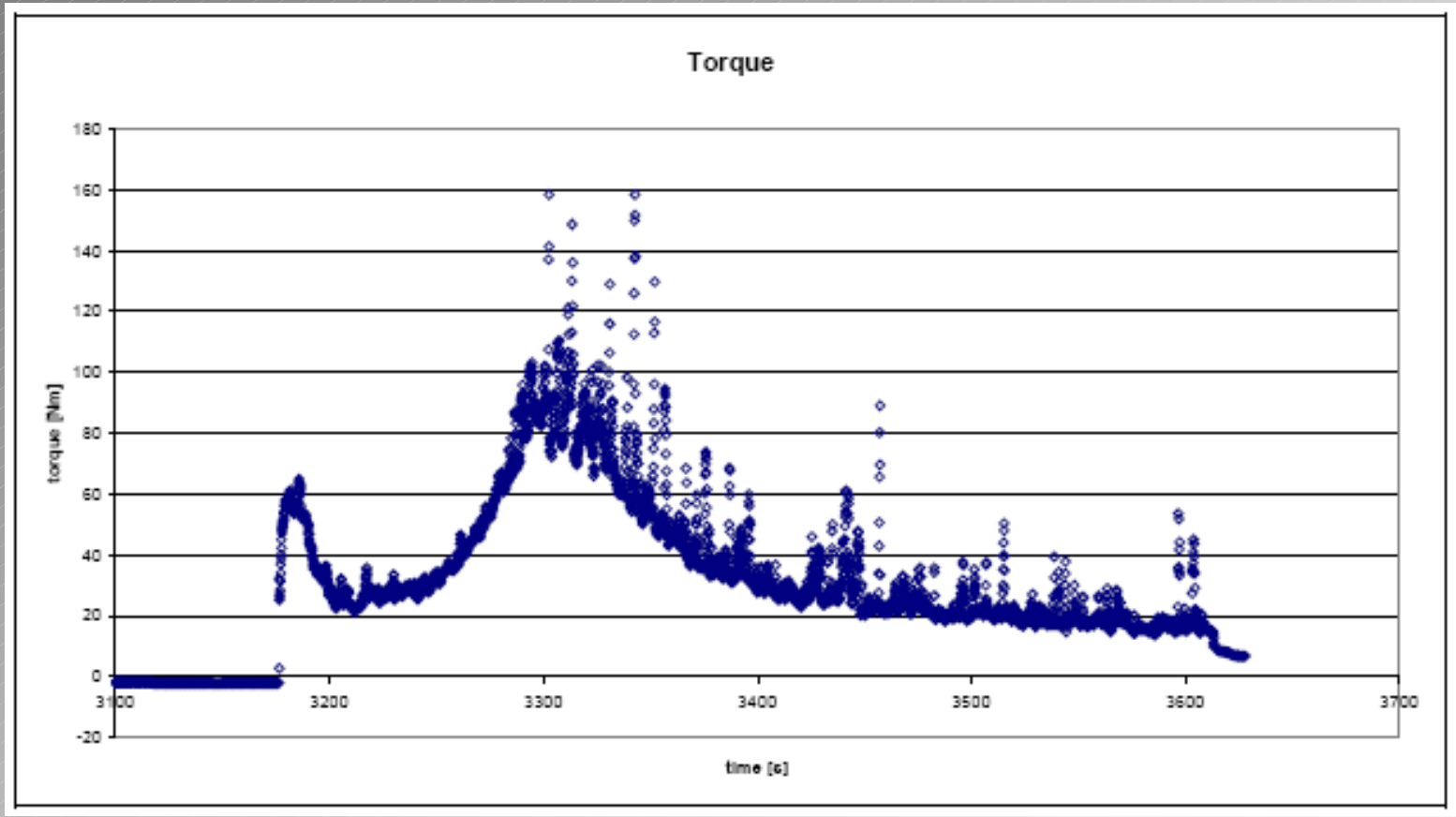

References

1 AFTES, 2001. EUPALINOS 2000. Synthèse, AFTES (ed.), Octobre 2001, Paris (in French)

2 Anagnostou, G., Kovari, K., 1996. Face stability conditions with Earth-pressure-balanced Shields. Tunnelling and Underground Space Technology, 11(2), Pergamon Press, Oxford, 165 - 173

3 Bezuijen, A., Schaminée, P. E. L., 2000. Model experiments using foam simulation the drilling with an EPB shield, GeoDelft Report No. BF 51010. Delft, GeoDelft

4 Bezuijen, A., Schaminée, P. E. L., 2001. Simulation of the EPB-shield TBM in model tests with foam as additive. In: Proceedings of Congress on Modern tunnelling science and technology, Kyoto, Balkema, Rotterdam, 935-940

5 Bordachar, F., Nicolas, L., 1998. Fluides conditionneurs pour la pression de terre, Tunnels et ouvrages souterrains, 169(Janvier/Février), AFTES, 21 – 27 (in French)

References

1

Boone, S.J., Artigiani, E., Shirlaw, J.N., Ginanneschi, R., Leinala, T., Kochmanova, N., 2005. Use of ground conditioning agents for Earth Pressure Balance machine tunnelling. In: Proceedings of Congrès International de Chambéry, AFTES (ed), 313-319

2

Branque, D., Subrin, D., Boutin, C., 2003. Etude sur model réduit du creusement de tunnels par la méthode du bouclier a pression de terre. Tunnels et ouvrages souterrains, 179 (Septembre/Octobre), AFTES, Paris, 307 – 312 (in French)

3

BTS (2005) Closed-face tunnelling machines and ground stability, Thomas Telford

4

Guglielmetti V., Mahtab A., Xu S (2007) Machanized Tunnelling in Urban Area, Balkema (in press)

5

Guglielmenti V., Grasso P.G., Gaj F., Chiriotti E. (2002), Il controllo della stabilità del fronte in uno scavo meccanizzato in ambiente urbano con un metodo a pressione di terra bilanciata – EPB Shield, Gallerie e grandi opere sotterranee, 67, 21-34

References

1 Kuribashi, Y., Yagi, K., Ishimoto, H., 1993. The PMF Super shield tunneling process - expanding applications for earth pressure balanced shield tunnelling, In Proceedings of International Congress on Options for Tunnelling 1993, Burger (ed), Elsevier, 411–420

2 Mair, R., Merritt, A., Borghi, X., Yamazaki, H., Minami, T., 2003. Soil conditioning for clay soils, Tunnels & Tunnelling International, April, 29-33

3 Merritt, A., Mair, R.J., 2006. Mechanics of tunnelling machine screw conveyor: model tests, Geotechnique, 56(9), 605-615

4 Milligan, G. 2001. Soil conditioning and lubricating agents in tunnelling and pipe jacking, In: Proceedings of Underground Construction 2001, London, 105-116

5 Nomoto, T., Imaura, S., Hagiwara, T., Kusakabe, O., Fujii, N., 1999. Shield tunnel construction in centrifuge, Journal of geotechnical and geoenvironmental engineering, April, ASCE, 289-300

References

1 Peña, M., 2003. Soil conditioning for sands, Tunnels & Tunnelling international, July, 40-42

2 Peron, J.Y., Marcheselli, P., 1994. Construction of the 'Passante Ferroviario' link in Milan. Italy. lots 3P, 5P, and 6P: excavation by large EPBS with chemical foam injection, In: Proceedings of Tunnelling '94, IMM (ed), London, Chapman & Hall, London, 679 - 707

3 Quebaud, S., 1996. Contribution à l'étude du percement de galeries par boucliers à pression de terre: amélioration du creusement par l'utilisation des produits moussants, PHD thèses, Université des Sciences et Technologies de Lille, Lille (France) (in French)

4 Quebaud, S., Sibai, M., Henry, J.P., 1998. Use of chemical foam for improvements in drilling by earth pressure balanced shields in granular soils, Tunnelling and Underground Space Technology, 13(2), Pergamon Press, Oxford, 173 - 180

5

References

1 EFNARC, 2005. Specification and guidelines for the use of specialist products for Mechanized Tunnelling (TBM) in Soft Ground and Hard Rock, EFNARC recommendations

2 Herrenknecht, M., 1994. EPB or slurry machine: the choice, Tunnels & Tunnelling International, June, 35-36

3 Herrenknecht, M., Rehm, U., 2002. Newest development in mechanized tunnelling, In: Proceedings of Journées d'études internationals, Toulouse, AFTES (ed), 201-206

4 Kovari K. 2004. Safety system in uran tunnelling – The Zimmerberg Tunnel, In. Proceedings of International Tunnelling: Challenging Case Histories, Torino, 61-74

5 Jancsecz, S., Krause, R., Langmaack, L. 1999. Advantages of soil conditioning in shield tunnelling: experiences of LRTS Izmir, In: Proceedings of International Congress on Challenges for the 21st Century, Alten et al. (eds), Balkema, Rotterdam, 865-875

References

1 Langmaack, L., 2000. Advanced technology of Soil Conditioning in EPB Shield Tunnelling, MBT publication

2 Russo G. 2003. Uno riflessione sui criteri di valutazione della pressione di stabilizzazione del fronte nello scavo con EPBS. Gallerie e grandi opere sotterranee, 71, 18-32

3 Vinai, R., Oggeri, C., Peila, D., Pelizza, S. 2006. Condizionamento con schiuma dei terreni per applicazioni EPB: sperimentazione mediante un nuovo apparato di laboratorio, Gallerie e grandi opere sotterranee, 78 (1), Patron Editore, Bologna (in Italian)

4 Vinai, R., Oggeri, C., Peila, D. (2007) Soil conditioning of cohesionless soil for EPB applications: a laboratory research, presented for publication on TUST

5 Yoshikawa, T., 1996. Soil pressure drop of the screw conveyor for shielded machines, Trans. Jpn. Soc. Mech. Engrs, Part C 62 (595), 1197-1203